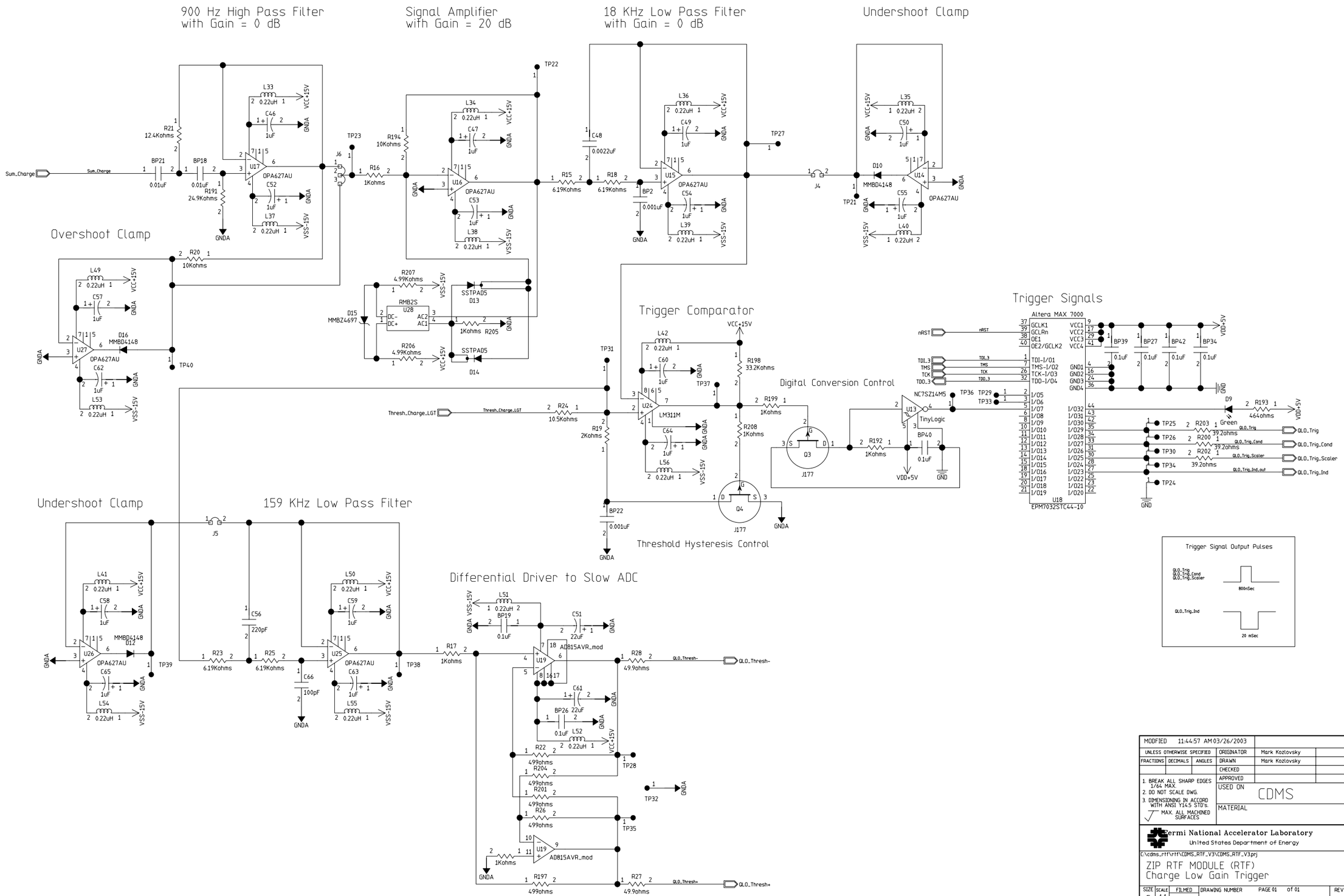

MODIFIED 11:44:57 AM 03/26/2003				
UNLESS OTHERWISE SPECIFIED			ORIGINATOR	Mark Kozlovsky
FRACTIONS	DECIMALS	ANGLES	DRAWN	Mark Kozlovsky
			CHECKED	
1. BREAK ALL SHARP EDGES 1/64 MAX.			APPROVED	
2. DO NOT SCALE DWG.			USED ON	CDMS
3. DIMENSIONING IN ACCORD WITH ANSI Y14.5 STD's.			MATERIAL	
MAX. ALL MACHINED SURFACES				

Fermi National Accelerator Laboratory
United States Department of Energy

C:\cdms_rtf\rtf\CDMS_RTF_V3\CDMS_RTF_V3.prj

ZIP RTF MODULE (RTF)
Charge Low Gain Trigger

SIZE	SCALE	FILMED	DRAWING NUMBER	PAGE 01 of 01	REV
F	1:1				

MrBND: V:6LA