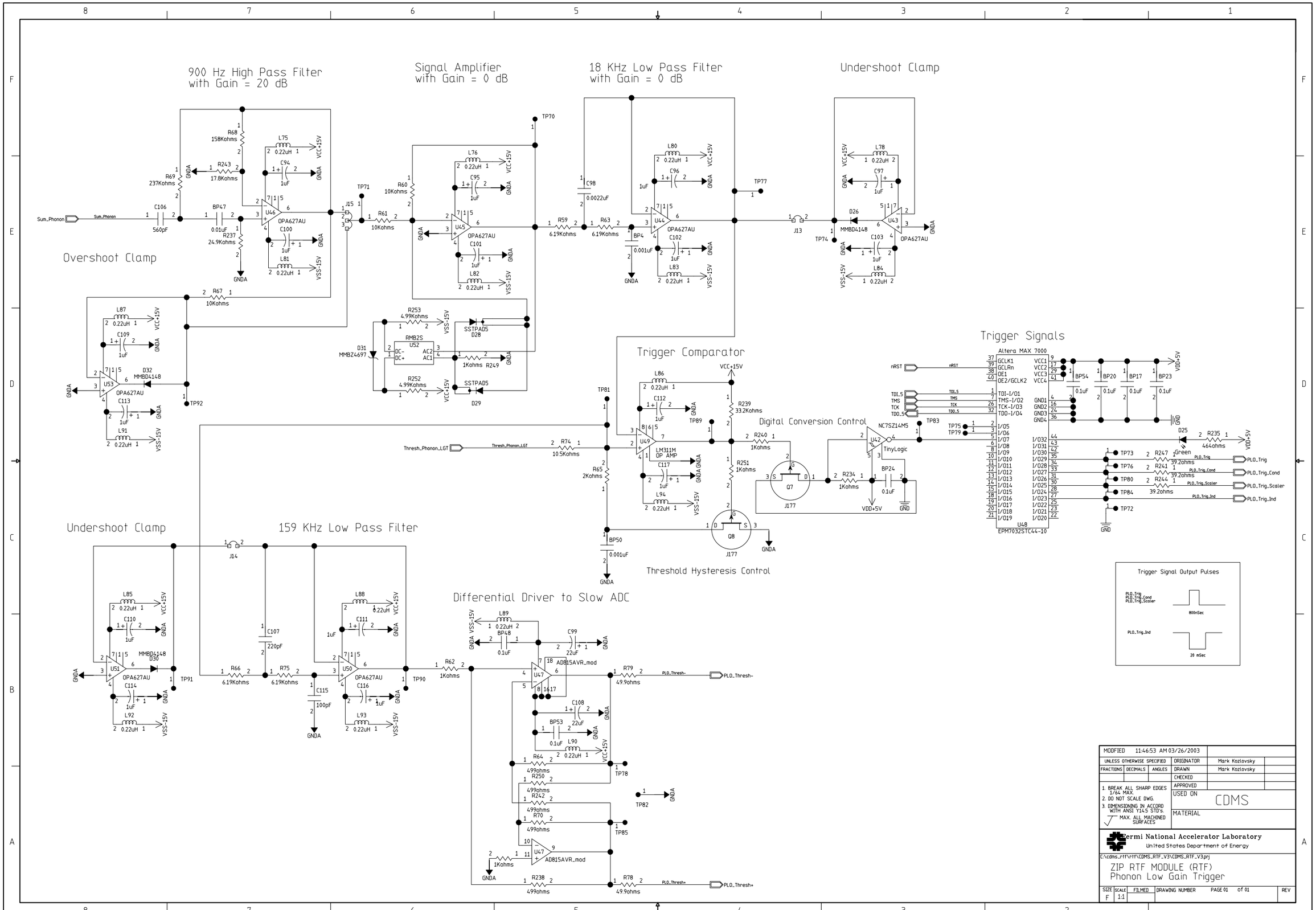
900 Hz High Pass Filter with Gain = 20 dB
Signal Amplifier with Gain = 0 dB
18 KHz Low Pass Filter with Gain = 0 dB
Undershoot Clamp
Overshoot Clamp
Trigger Comparator
Digital Conversion Control
Trigger Signals
Altera MAX 7000
EPM7032STC44-10
Threshold Hysteresis Control
Undershoot Clamp
159 KHz Low Pass Filter
Differential Driver to Slow ADC
Trigger Signal Output Pulses
800nSec
20 mSec
MODIFIED 11:46:53 AM 03/26/2003
UNLESS OTHERWISE SPECIFIED
FRACTIONS DECIMALS ANGLES
ORIGINATOR Mark Kozlovsky
DRAWN Mark Kozlovsky
CHECKED
APPROVED
USED ON CDMS
MATERIAL
1. BREAK ALL SHARP EDGES 1/64 MAX.
2. DO NOT SCALE DWG.
3. DIMENSIONING IN ACCORD WITH ANSI Y14.5 STD's.
MAX ALL MACHINED SURFACES
Fermi National Accelerator Laboratory
United States Department of Energy
C:\cdms_rtf\rtf\CDMS_RTF_V3\CDMS_RTF_V3.prj
ZIP RTF MODULE (RTF)
Phonon Low Gain Trigger
SIZE F SCALE 1:1 FILMED DRAWING NUMBER PAGE 01 of 01 REV