Filter = 340 Hz
Gain = 6 dB
Av = 2

Offset Compensation

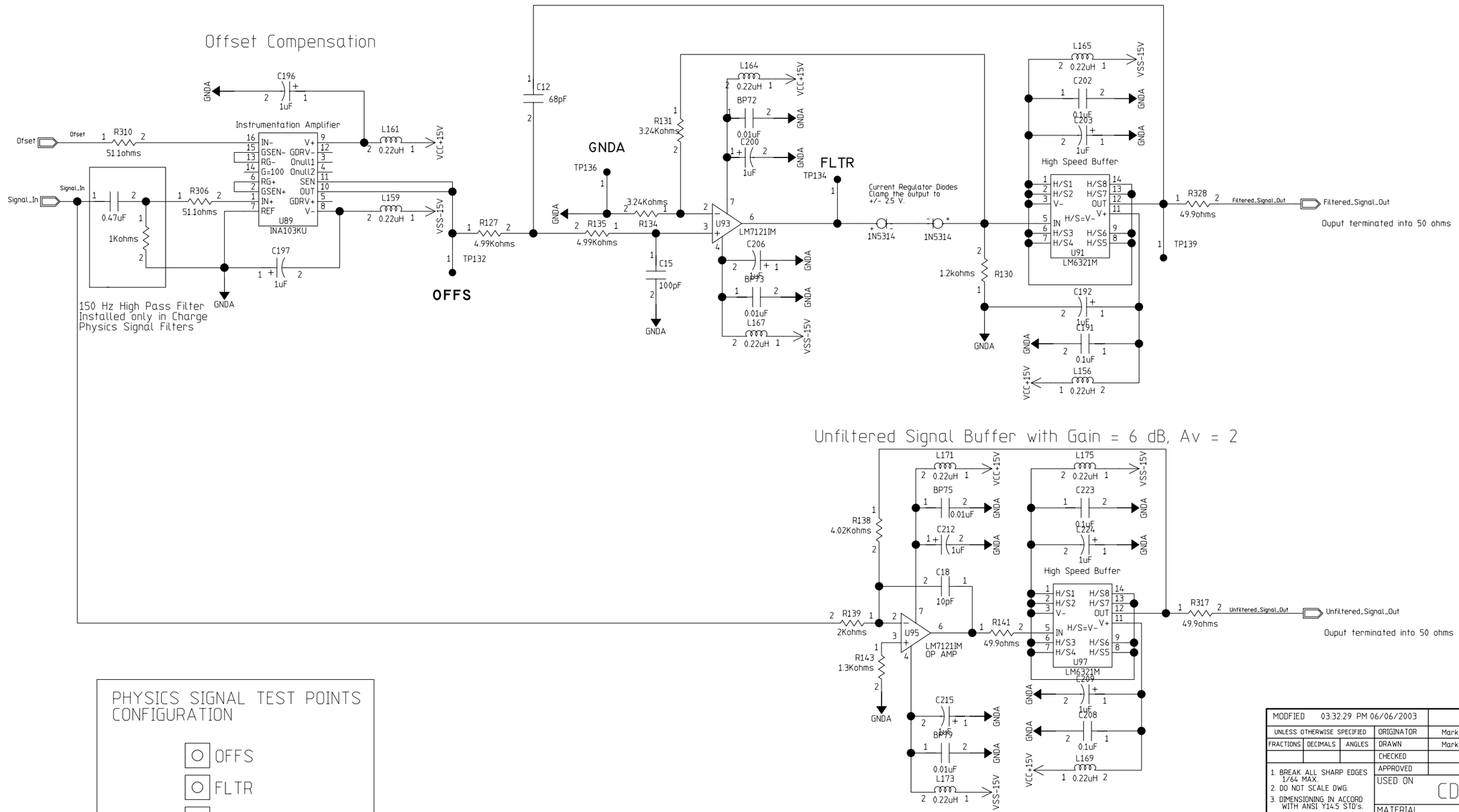

Unfiltered Signal Buffer with Gain = 6 dB, Av = 2

PHYSICS SIGNAL TEST POINTS CONFIGURATION

- ○ OFFS
- ○ FLTR
- ○ GNDA

Phonon C

MODIFIED 03:32:29 PM 06/06/2003				
UNLESS OTHERWISE SPECIFIED			ORIGINATOR	Mark Kozlovsky
FRACTIONS	DECIMALS	ANGLES	DRAWN	Mark Kozlovsky
			CHECKED	
			APPROVED	

1. BREAK ALL SHARP EDGES 1/64 MAX.
2. DO NOT SCALE DWG.
3. DIMENSIONING IN ACCORD WITH ANSI Y14.5 STD'S.

√ MAX. ALL MACHINED SURFACES

USED ON CDMS

MATERIAL

Fermi National Accelerator Laboratory
United States Department of Energy

C:\cdms_rtf\rtf\CDMS_RTF_V3\CDMS_RTF_V3.prj

ZIP RTF MODULE (RTF)
Physics Signals Channel

SIZE	SCALE	FILMED	DRAWING NUMBER	PAGE 01 of 01	REV
D	1:1				A

H=8ND; V=4LA