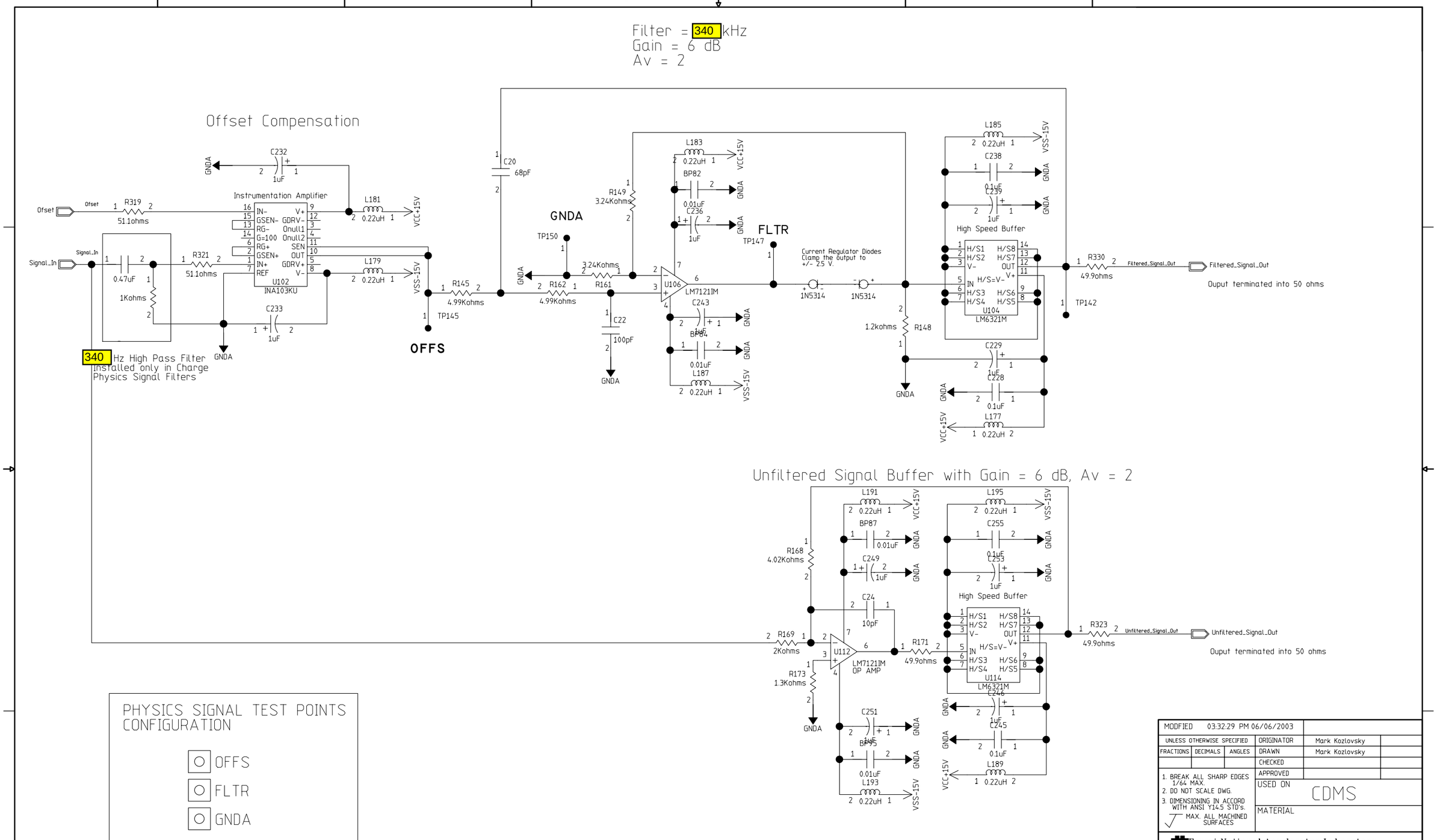
Filter = 340 kHz
Gain = 6 dB
Av = 2
Offset Compensation
Instrumentation Amplifier
U102
INA103KU
340 Hz High Pass Filter
Installed only in Charge
Physics Signal Filters
OFFS
GNDA
FLTR
U106
LM7121IM
Current Regulator Diodes
Clamp the output to
+/- 2.5 V.
High Speed Buffer
U104
LM6321M
Filtered_Signal_Out
Ouput terminated into 50 ohms
Unfiltered Signal Buffer with Gain = 6 dB, Av = 2
U112
LM7121IM
OP AMP
U114
LM6321M
Unfiltered_Signal_Out
Ouput terminated into 50 ohms
PHYSICS SIGNAL TEST POINTS
CONFIGURATION
OFFS
FLTR
GNDA
Q Inner
MODIFIED 03:32:29 PM 06/06/2003
UNLESS OTHERWISE SPECIFIED
FRACTIONS DECIMALS ANGLES
ORIGINATOR Mark Kozlovsky
DRAWN Mark Kozlovsky
CHECKED
APPROVED
1. BREAK ALL SHARP EDGES 1/64 MAX.
2. DO NOT SCALE DWG.
3. DIMENSIONING IN ACCORD WITH ANSI Y14.5 STD's.
MAX. ALL MACHINED SURFACES
USED ON CDMS
MATERIAL
Fermi National Accelerator Laboratory
United States Department of Energy
C:\cdms_rtf\rtf\CDMS_RTF_V3\CDMS_RTF_V3.prj
ZIP RTF MODULE (RTF)
Physics Signals Channel
SIZE D
SCALE 1:1
FILMED
DRAWING NUMBER
PAGE 01 of 01
REV A