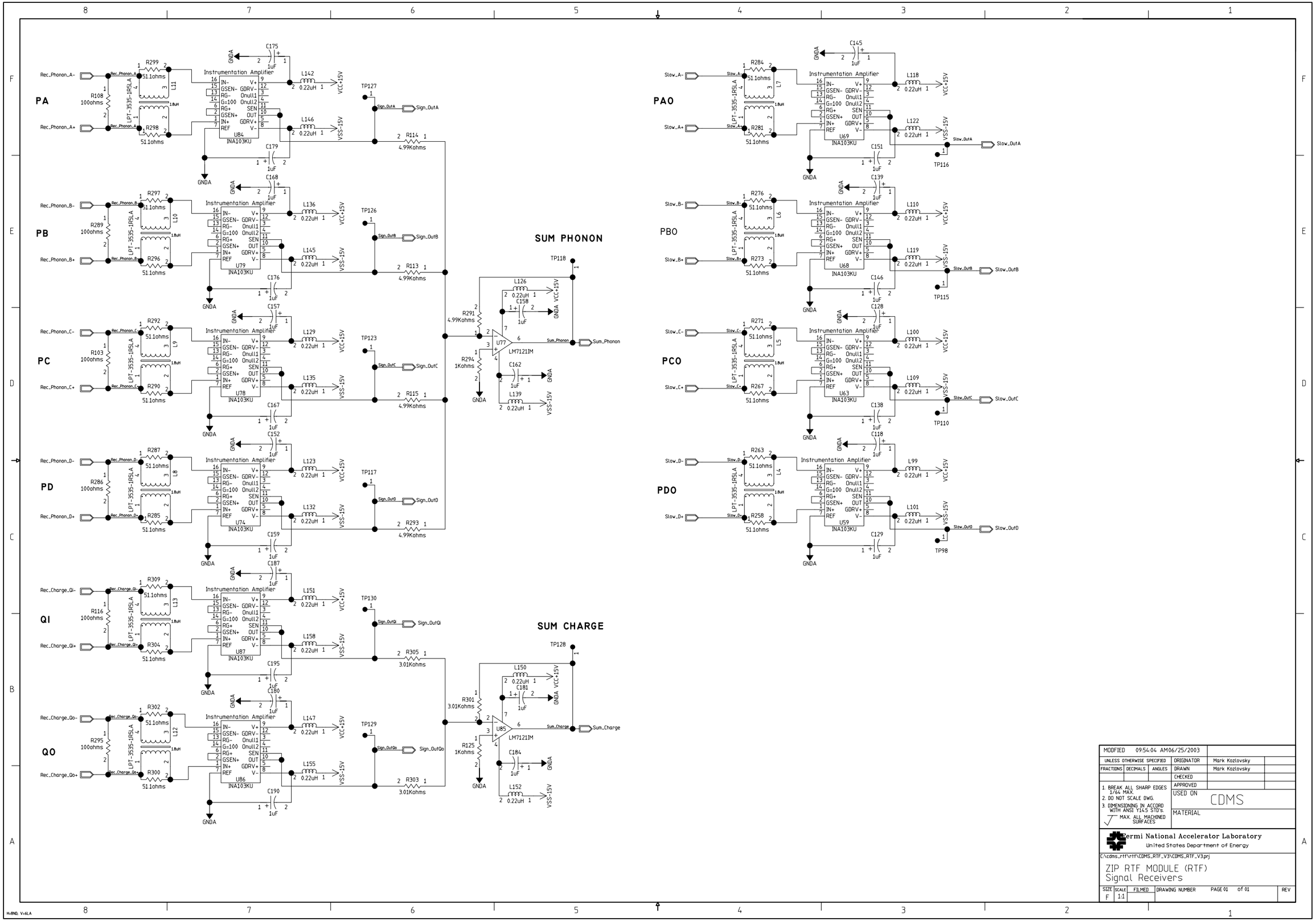
PA
PB
PC
PD
QI
QO
PAO
PBO
PCO
PDO
SUM PHONON
SUM CHARGE
Instrumentation Amplifier
INA103KU
LM7121IM
Sum_Phonon
Sum_Charge
Sign_OutA
Sign_OutB
Sign_OutC
Sign_OutD
Sign_OutQi
Sign_OutQo
Slow_OutA
Slow_OutB
Slow_OutC
Slow_OutD
GNDA
VCC+15V
VSS-15V
LPT-3535-1R5LA
MODIFIED 09:54:04 AM06/25/2003
UNLESS OTHERWISE SPECIFIED
FRACTIONS DECIMALS ANGLES
ORIGINATOR Mark Kozlovsky
DRAWN Mark Kozlovsky
CHECKED
APPROVED
1. BREAK ALL SHARP EDGES 1/64 MAX.
2. DO NOT SCALE DWG.
3. DIMENSIONING IN ACCORD WITH ANSI Y14.5 STD's.
MAX. ALL MACHINED SURFACES
USED ON CDMS
MATERIAL
Fermi National Accelerator Laboratory
United States Department of Energy
C:\cdms_rtf\rtf\CDMS_RTF_V3\CDMS_RTF_V3.prj
ZIP RTF MODULE (RTF)
Signal Receivers
SIZE F
SCALE 1:1
FILMED
DRAWING NUMBER
PAGE 01 of 01
REV