REV.	DESCRIPTION	DRAWN / APPD.	DATE / DATE

ZIP–RTF MODULE MAIN DIAGRAM

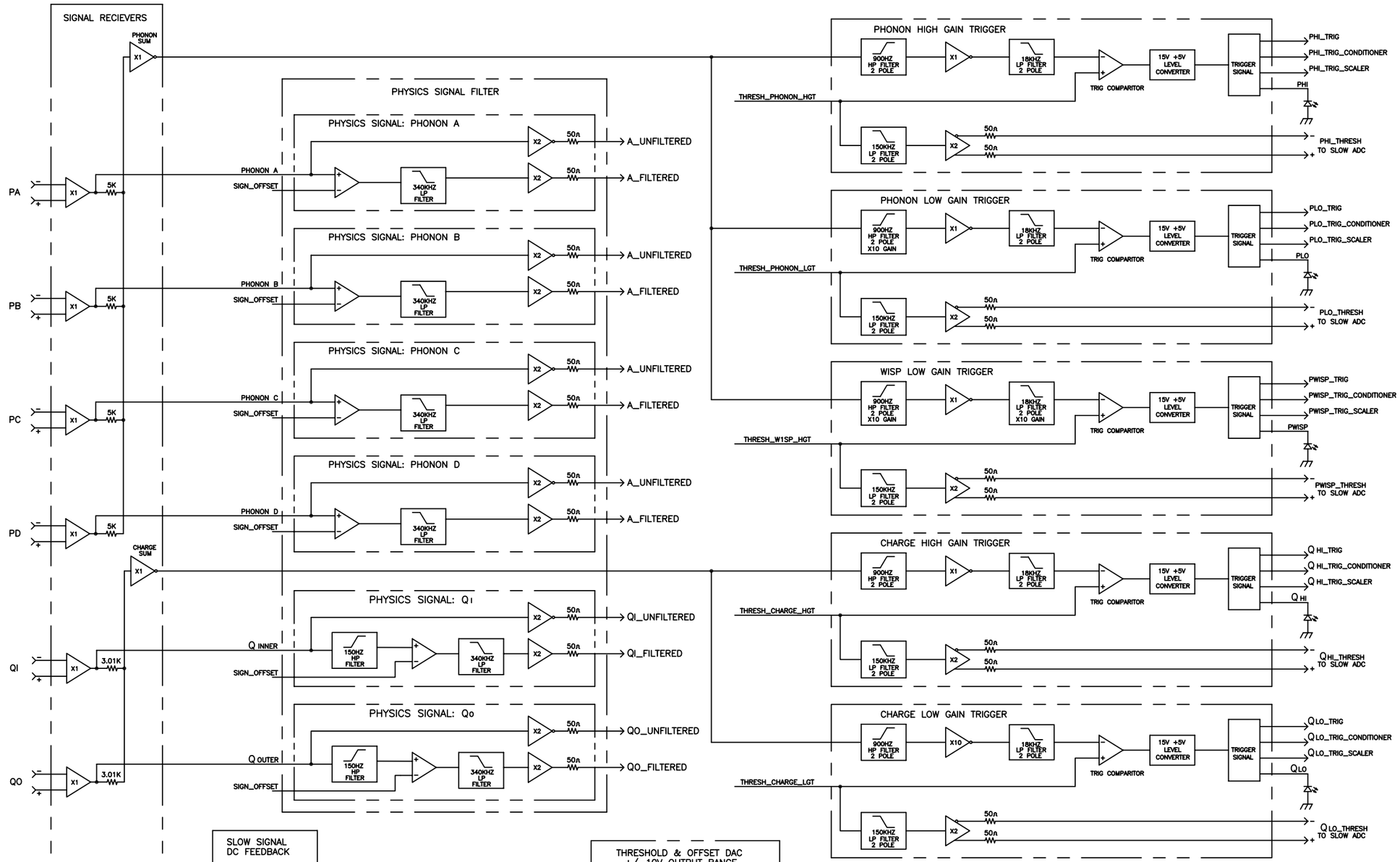

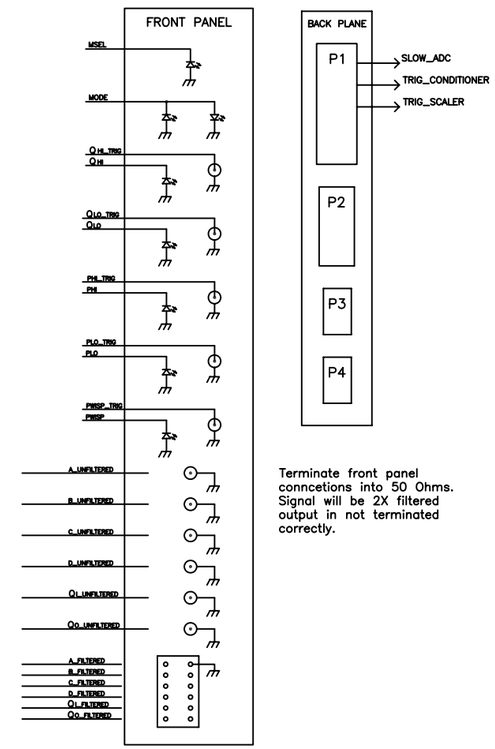

Terminate front panel conncetions into 50 Ohms. Signal will be 2X filtered output in not terminated correctly.

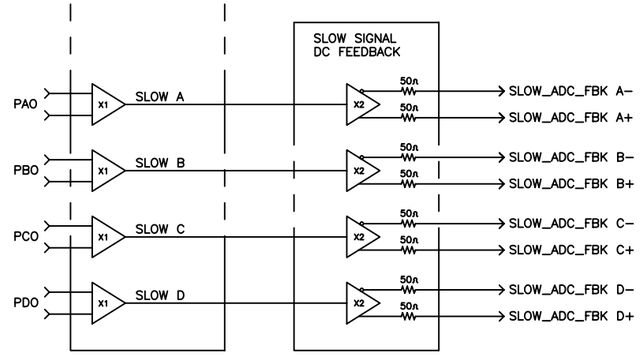

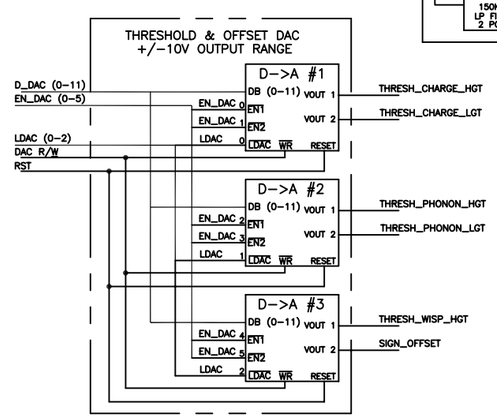

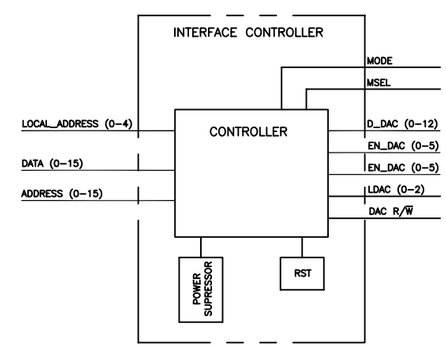

RTF MODULE ADDRESSING

ORIGINATOR	W. JOHNSON	7/17/03	CHECKED	
DRAWN	N. CUNY	7/17/03	APPROVED	

FERMI NATIONAL ACCELERATOR LABORATORY
UNITED STATES DEPARTMENT OF ENERGY

PPD/ETT/CDMS
ZIP/RTF BLOCK DIAGRAM
VERSION 3

SCALE	SOFTWARE	DRAWING NUMBER	REV.
NONE	AUTOCAD		