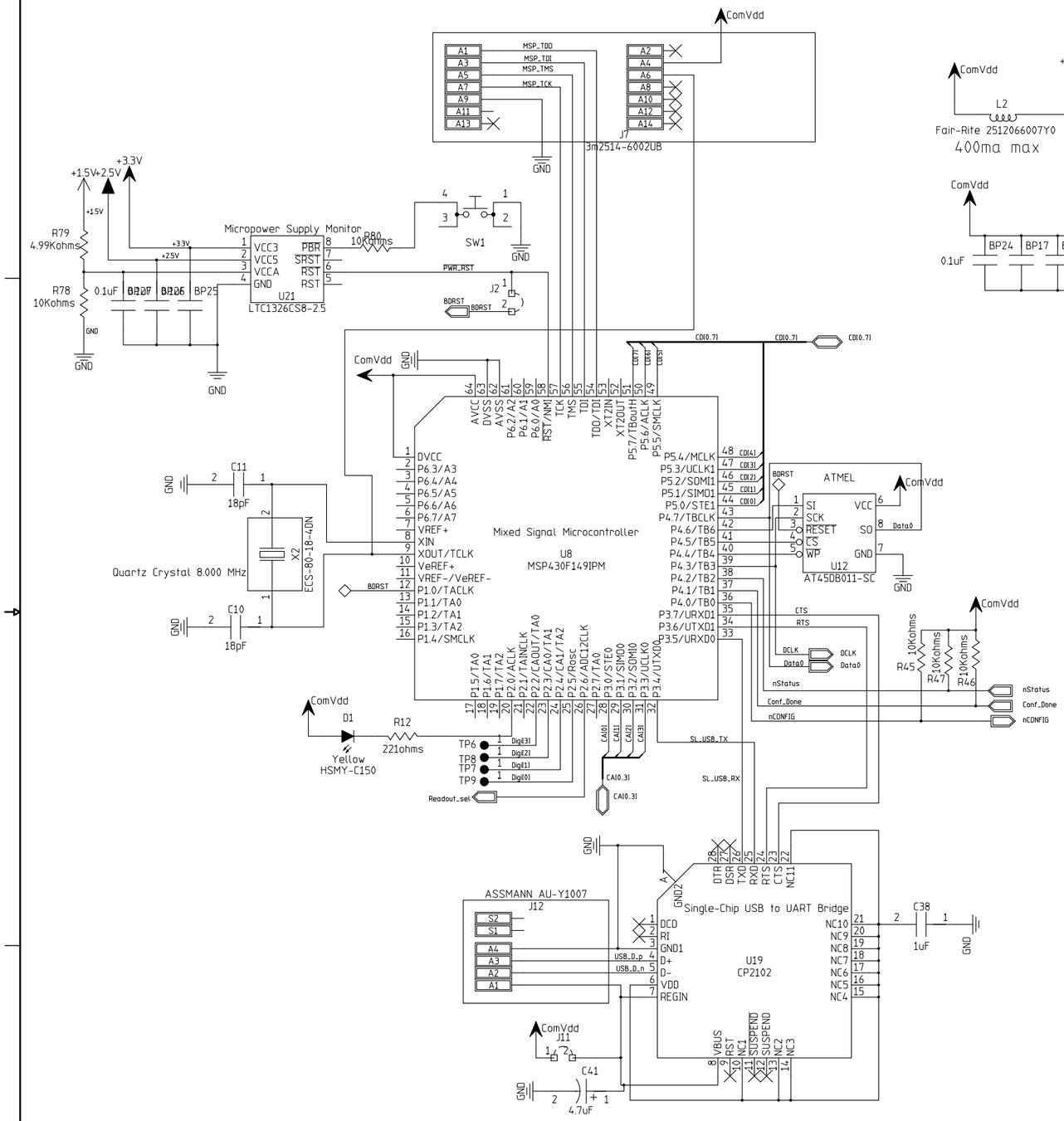

MODIFIED 2/16/2007 5:36:20 PM		Communication2	
EED Department	ORIGINATOR	M. Larwill, S. Hansen	DATE date
	DRAWN	M. Larwill	DATE date
	CHECKED	checked	DATE date
	APPROVED	approved	DATE date

Fermi National Accelerator Laboratory
United States Department of Energy

F:\Project\E907\tpc\FEC_v2\FEC_buffer_multicn\FEC.prj

Communications

SIZE	DRAWING NUMBER	REV
D	drawing number	A

Schematic Page 01 of 01

H=8ND; V=4LA