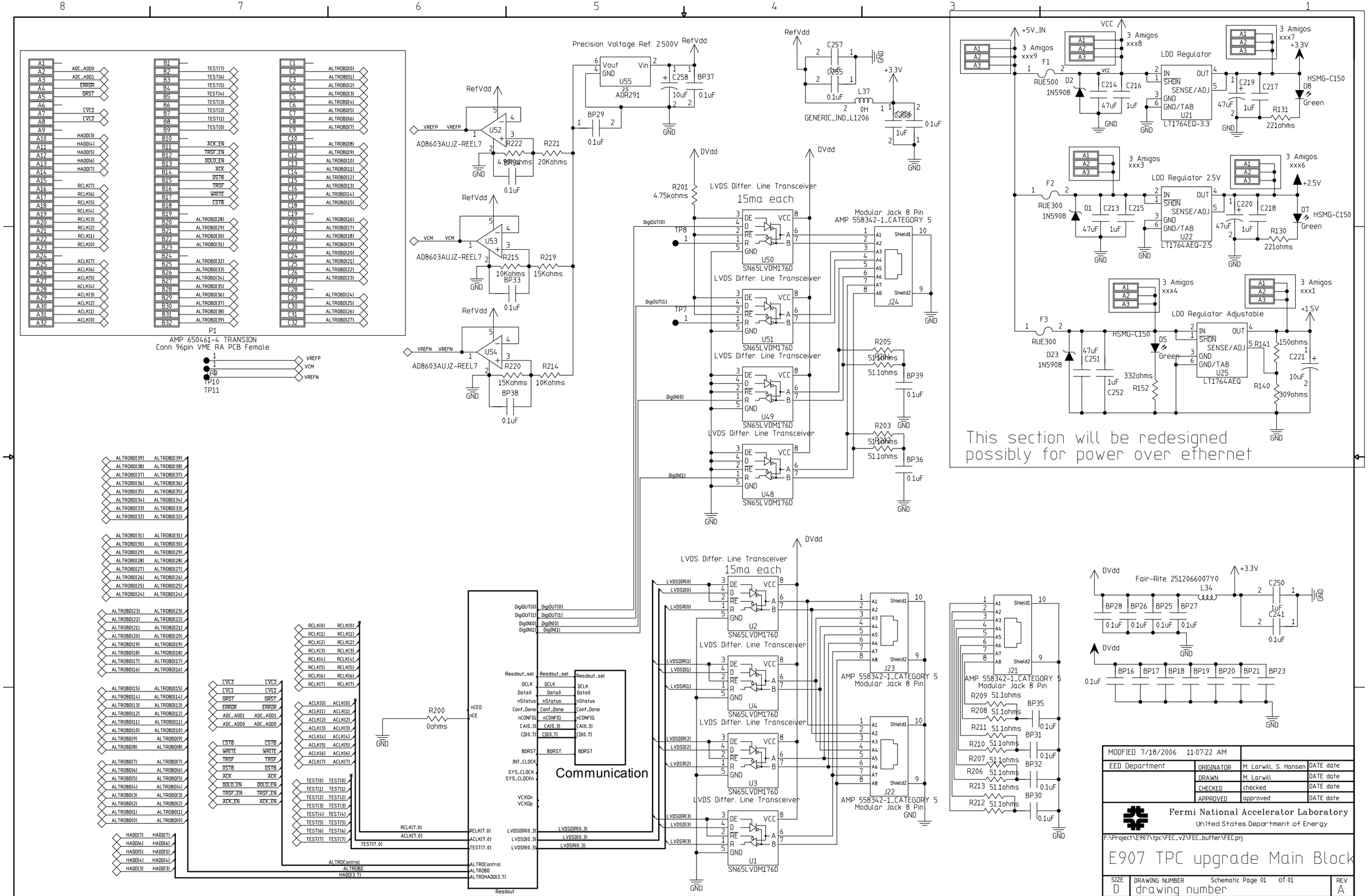
P1
AMP 650461-4 TRANSION
Conn 96pin VME RA PCB Female
Precision Voltage Ref. 2.500V
ADR291
AD8603AUJZ-REEL7
LVDS Differ. Line Transceiver
15ma each
SN65LVDM176D
Modular Jack 8 Pin
AMP 558342-1_CATEGORY 5
LDO Regulator
LT1764EQ-3.3
LDO Regulator 2.5V
LT1764AEQ-2.5
LDO Regulator Adjustable
LT1764AEQ
This section will be redesigned
possibly for power over ethernet
Communication
Readout
MODFIED 7/18/2006 11:07:22 AM
EED Department
ORIGINATOR M. Larwill, S. Hansen
DRAWN M. Larwill
CHECKED checked
APPROVED approved
Fermi National Accelerator Laboratory
United States Department of Energy
F:\Project\E907\tpc\FEC_v2\FEC_buffer\FEC.prj
E907 TPC upgrade Main Block
SIZE D
DRAWING NUMBER drawing number
Schematic Page 01 of 01
REV A