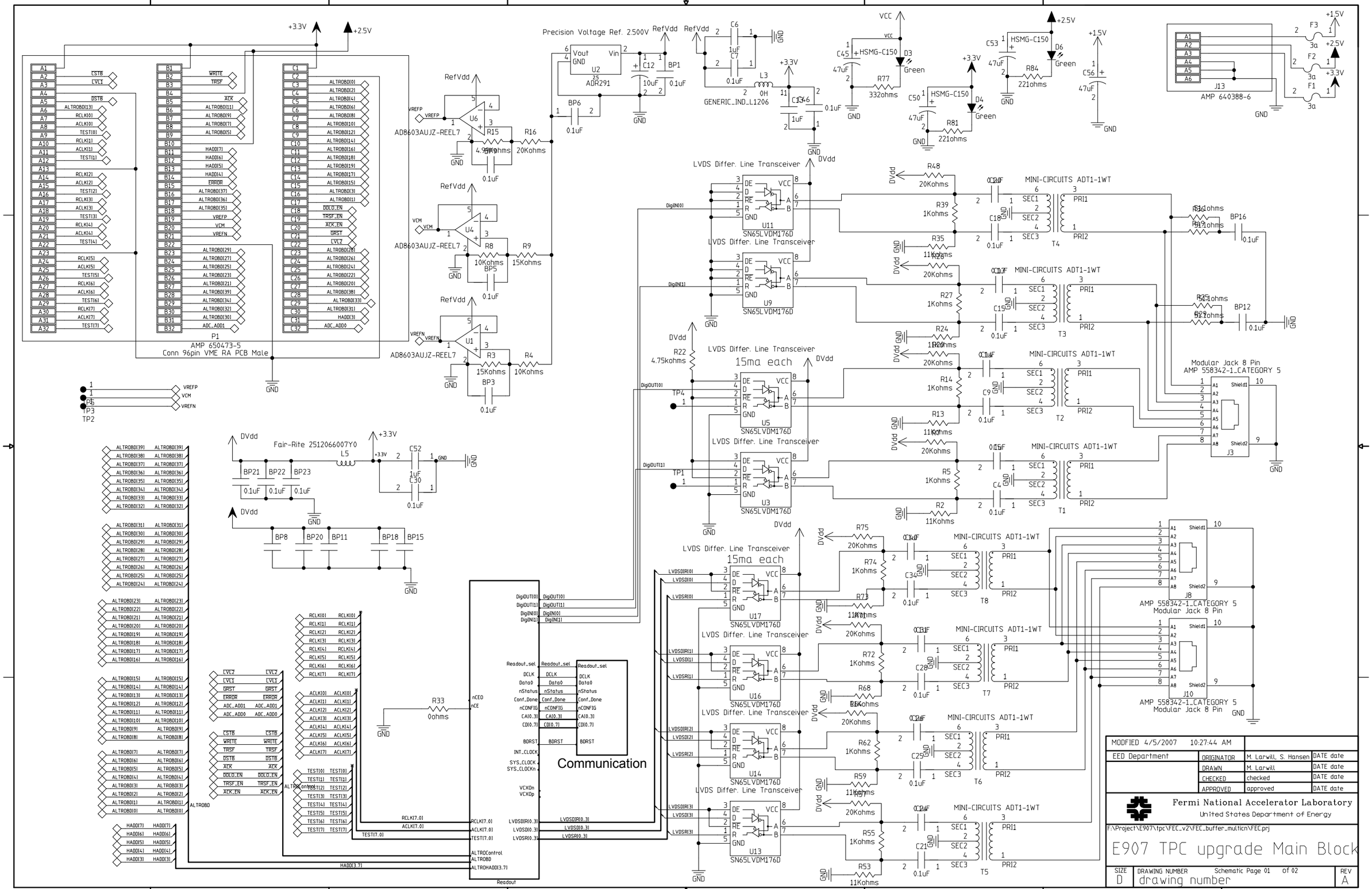
AMP 650473-5
Conn 96pin VME RA PCB Male
P1
AD8603AUJZ-REELT7
Precision Voltage Ref. 2.500V
ADR291
LVDS Differ. Line Transceiver
15ma each
SN65LVDM176D
MINI-CIRCUITS ADT1-1WT
Modular Jack 8 Pin
AMP 558342-1_CATEGORY 5
AMP 640388-6
Fair-Rite 2512066007Y0
Communication
Readout
MODIFIED 4/5/2007 10:27:44 AM
EED Department
ORIGINATOR M. Larwill, S. Hansen
DRAWN M. Larwill
CHECKED checked
APPROVED approved
Fermi National Accelerator Laboratory
United States Department of Energy
F:\Project\E907\tpc\FEC_v2\FEC_buffer_multicn\FEC.prj
E907 TPC upgrade Main Block
SIZE D
DRAWING NUMBER drawing number
Schematic Page 01 of 02
REV A