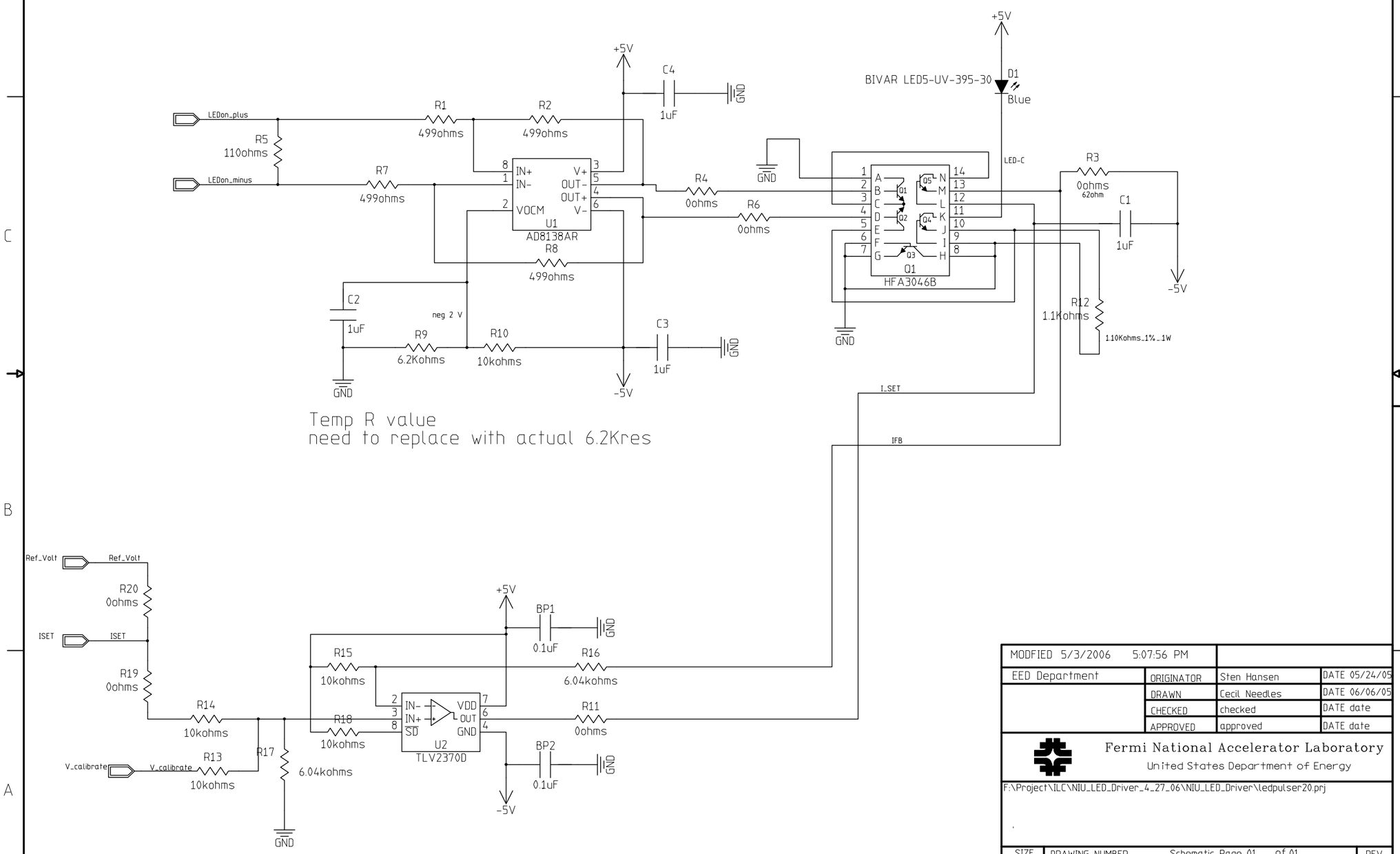


| | | | |
|---|---|---|---|
| MODFIED 5/3/2006 5:07:56 PM | | | |
| EED Department | ORIGINATOR | Sten Hansen | DATE 05/24/05 |
| | DRAWN | Cecil Needles | DATE 06/06/05 |
| | CHECKED | checked | DATE date |
| | APPROVED | approved | DATE date |

Fermi National Accelerator Laboratory
United States Department of Energy

F:\Project\ILC\NIU_LED_Driver_4_27_06\NIU_LED_Driver\ledpulser20.prj

| SIZE | DRAWING NUMBER | REV |
|---|---|---|
| C | drawing number | A |

Schematic Page 01 of 01

H=4ND; V=4LA