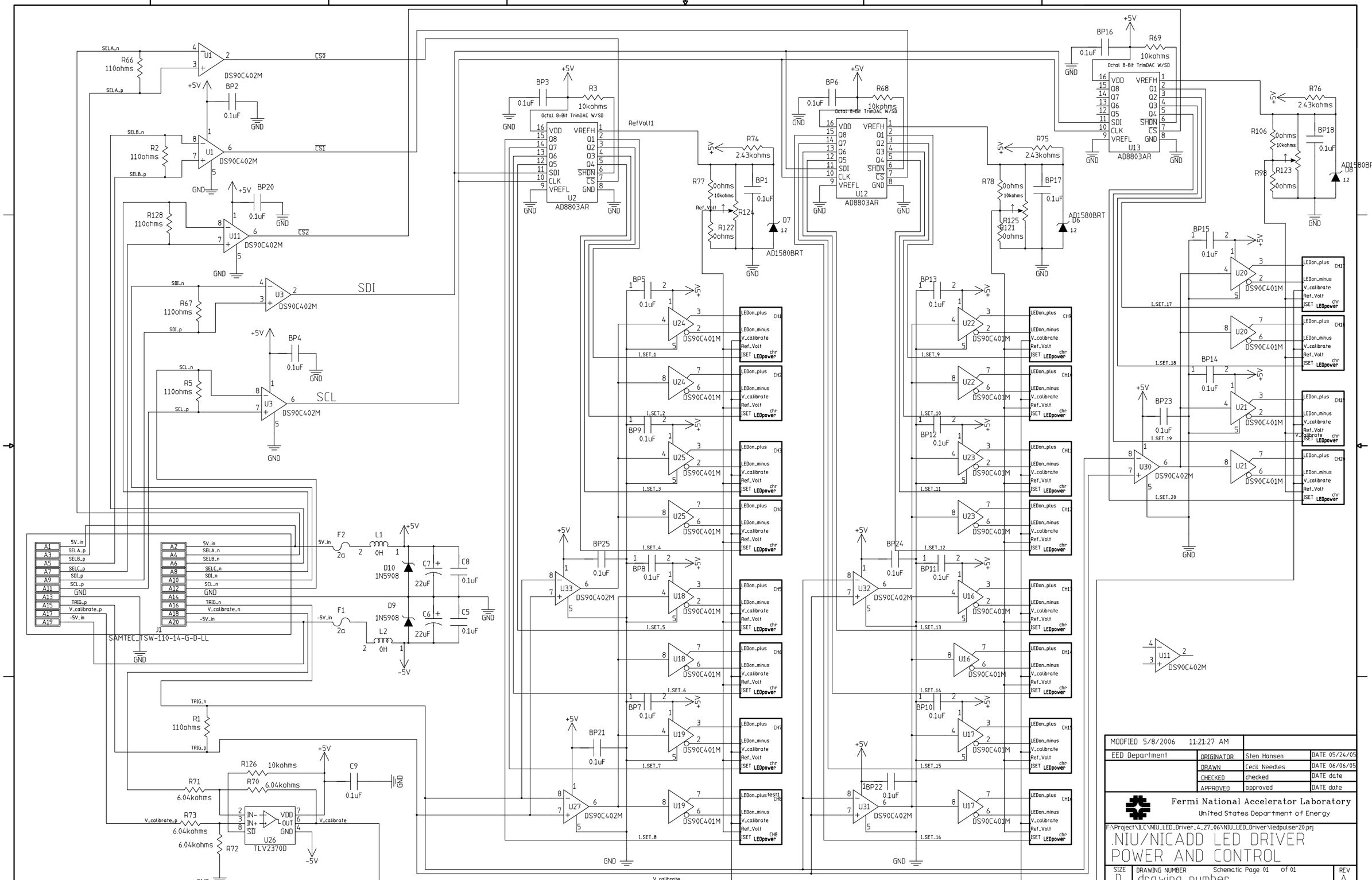
MODIFIED 5/8/2006 11:21:27 AM
EED Department
ORIGINATOR Sten Hansen DATE 05/24/05
DRAWN Cecil Needles DATE 06/06/05
CHECKED checked DATE date
APPROVED approved DATE date
Fermi National Accelerator Laboratory
United States Department of Energy
F:\Project\ILC\NIU_LED_Driver_4_27_06\NIU_LED_Driver\ledpulser20.prj
NIU/NICADD LED DRIVER
POWER AND CONTROL
SIZE D
DRAWING NUMBER drawing number
Schematic Page 01 of 01
REV A
H=8ND; V=4LA