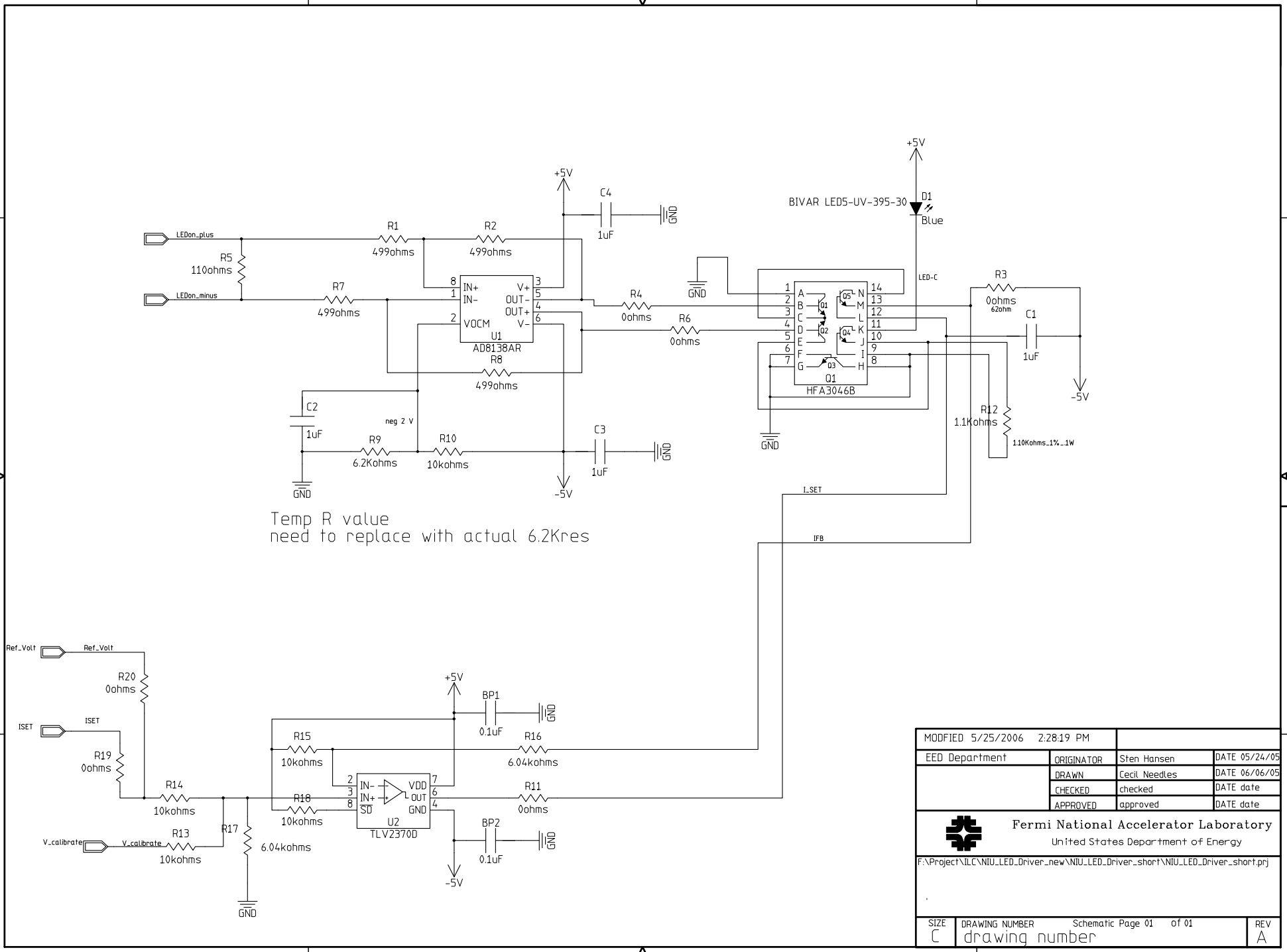
LEDon_plus
LEDon_minus
R5
110ohms
R1
499ohms
R2
499ohms
R7
499ohms
R8
499ohms
U1
AD8138AR
IN+
IN-
VOCM
V+
OUT-
OUT+
V-
+5V
C4
1uF
GND
R4
0ohms
R6
0ohms
C2
1uF
neg 2 V
R9
6.2Kohms
R10
10kohms
C3
1uF
-5V
Temp R value
need to replace with actual 6.2Kres
BIVAR LED5-UV-395-30
D1
Blue
LED-C
Q1
HFA3046B
R3
0ohms
62ohm
C1
1uF
R12
1.1Kohms
1.10Kohms_1%_1W
I_SET
IFB
Ref_Volt
R20
0ohms
ISET
R19
0ohms
R14
10kohms
R17
6.04kohms
V_calibrate
R13
10kohms
R15
10kohms
R18
10kohms
U2
TLV2370D
IN-
IN+
SD
VDD
OUT
GND
BP1
0.1uF
R16
6.04kohms
R11
0ohms
BP2
0.1uF
MODFIED 5/25/2006 2:28:19 PM
EED Department
ORIGINATOR Sten Hansen DATE 05/24/05
DRAWN Cecil Needles DATE 06/06/05
CHECKED checked DATE date
APPROVED approved DATE date
Fermi National Accelerator Laboratory
United States Department of Energy
F:\Project\ILC\NIU_LED_Driver_new\NIU_LED_Driver_short\NIU_LED_Driver_short.prj
SIZE C
DRAWING NUMBER Schematic Page 01 of 01
drawing number
REV A
H=4ND; V=4LA