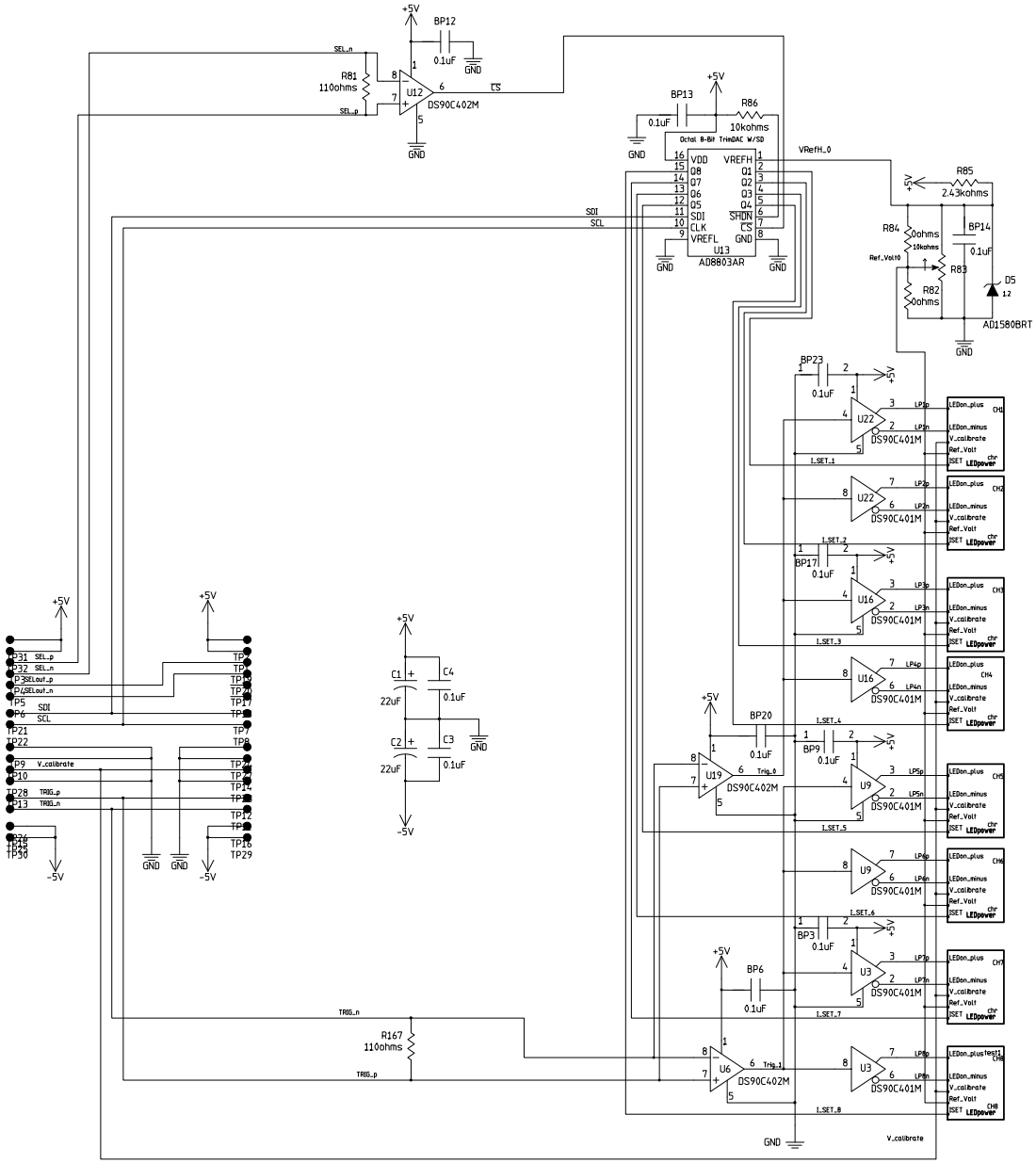

MODFIED 6/2/2006 10:52:31 AM			
EED Department	ORIGINATOR	Sten Hansen	DATE 05/24/05
	DRAWN	Cecil Needles	DATE 06/06/05
	CHECKED	checked	DATE date
	APPROVED	approved	DATE date

Fermi National Accelerator Laboratory
United States Department of Energy

F:\Project\ILC\NIU_LED_Driver_new\NIU_LED_Driver_long\NIU_LED_Driver_long.prj

.NIU/NICADD LED DRIVER POWER AND CONTROL

SIZE	DRAWING NUMBER		REV
D	drawing number	Schematic Page 01 of 01	A

H=BND: V=4LA