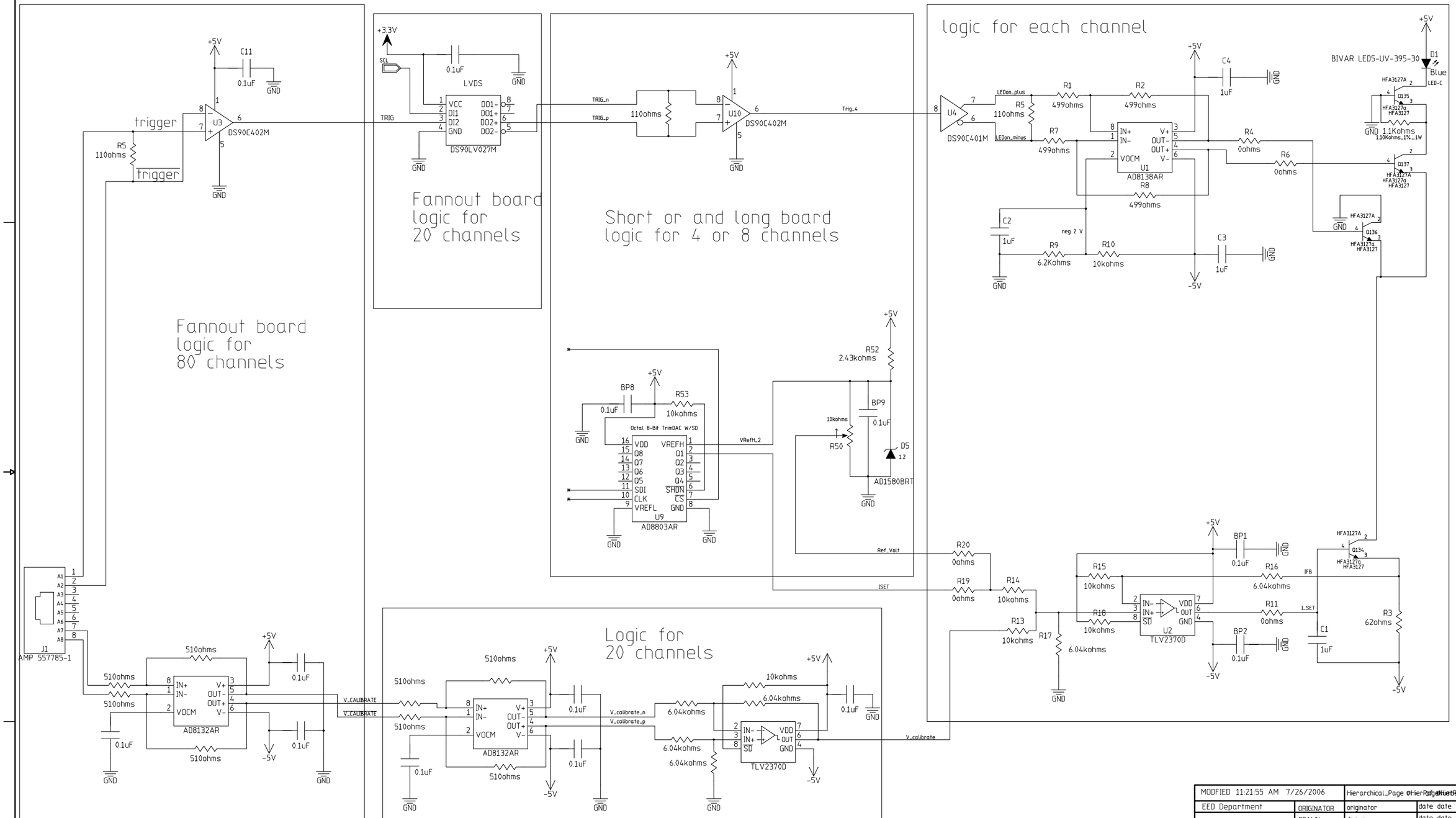

MODFIED 11:21:55 AM 7/26/2006		Hierarchical_Page 04 Page Number Page Total	
EED Department	ORIGINATOR	originator	date date
	DRAWN	drawn	date date
	CHECKED	checked	date date
	APPROVED	approved	date date

Fermi National Accelerator Laboratory
United States Department of Energy

F:\Project\ILC\NIU_Led_pulser\spice_sim\Pulser_6_1_05\Practice.prj

SIZE	DRAWING NUMBER	REV
D	drawing number Schematic Page 04 of 03	A

H=8ND; V=4LA