REV.	DESCRIPTION	DRAWN	DATE
		APPD.	DATE

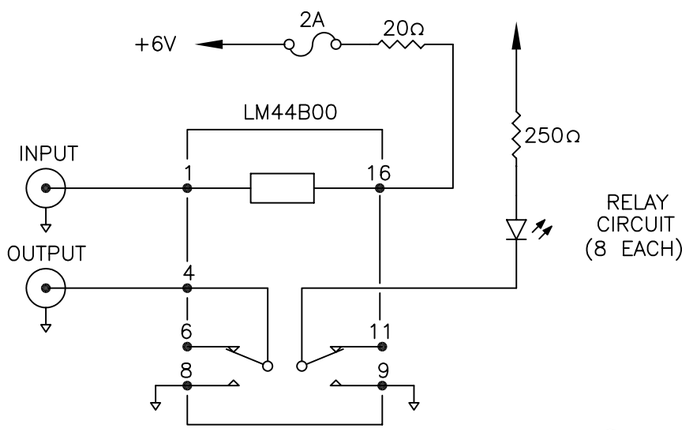

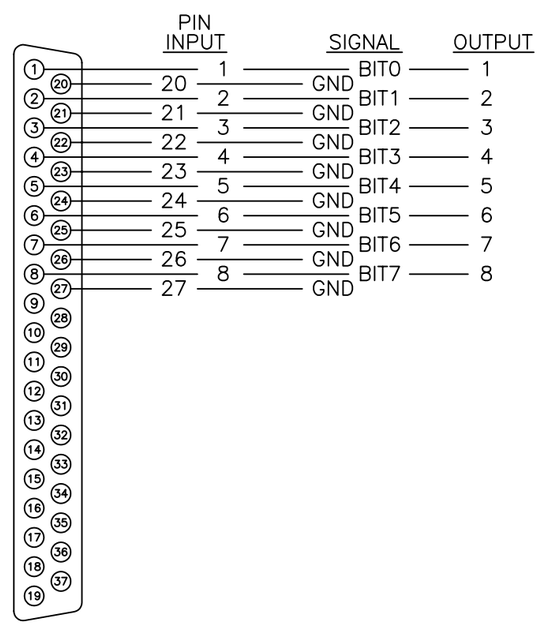

ORIGINATOR	C. DRENNAN	5/9/02	CHECKED		
DRAWN	N. CUNY	5/9/02	APPROVED		

FERMI NATIONAL ACCELERATOR LABORATORY
UNITED STATES DEPARTMENT OF ENERGY

RELAY PRINTED CIRCUIT BOARD

SCALE	SOFTWARE	DRAWING NUMBER	REV.
FULL	AUTOCAD	0000-EC-173468-3	