REV.	DESCRIPTION	DRAWN / APPD.	DATE / DATE

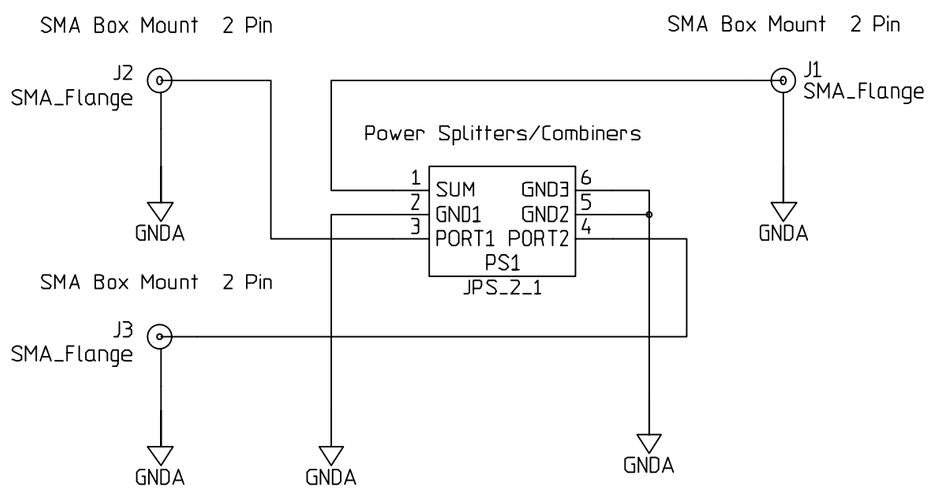

ITEM NO.	PART NO.	DESCRIPTION OR SIZE	QTY. REQ.

ORIGINATOR	DRENNAN	5/2/01	CHECKED		
DRAWN	N. CUNY	5/2/01	APPROVED		

FERMI NATIONAL ACCELERATOR LABORATORY
UNITED STATES DEPARTMENT OF ENERGY

BPM SIGNAL SELECT MODULE
RF SPLITTER SCHEMATIC

SCALE	SOFTWARE	DRAWING NUMBER	REV.
NONE	AUTOCAD	0000-ED-173454-8	