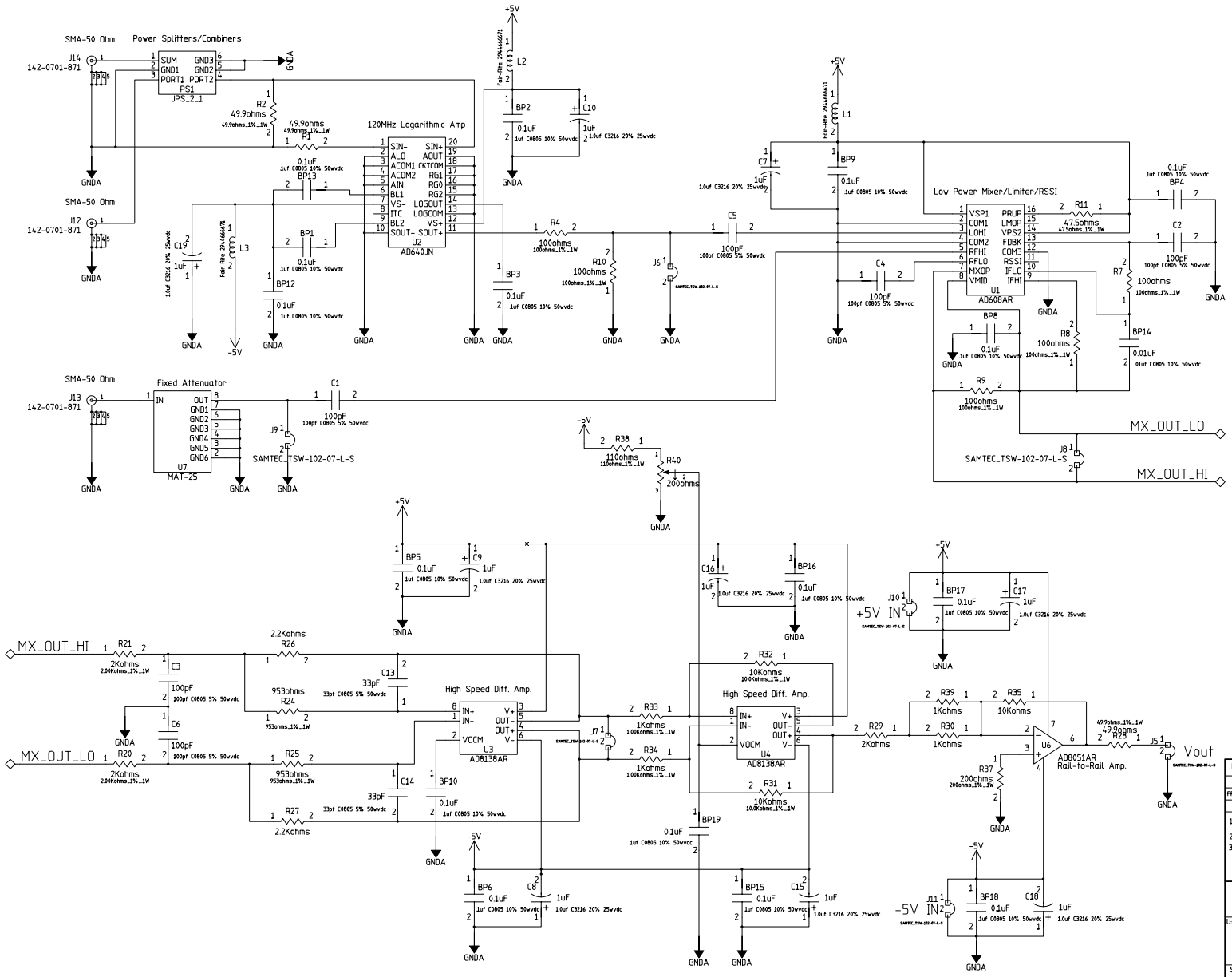

MODIFIED 08:46:33 AM05/08/2002			
UNLESS OTHERWISE SPECIFIED		ORIGINATOR	Craig Drennan
FRACTIONS	DECIMALS	ANGLES	DRAWN Craig Drennan
			CHECKED
1. BREAK ALL SHARP EDGES 1/64 MAX.			APPROVED
2. DO NOT SCALE DWG.			USED ON
3. DIMENSIONING IN ACCORD WITH ANSI Y14.5 STD's.			MATERIAL
MAX. ALL MACHINED SURFACES			

Fermi National Accelerator Laboratory
United States Department of Energy

U:\Jobs\SyncDem1\SyncDem1.prj

BPM SYNC. DEMODULATOR SCHEMATIC

SIZE	SCALE	FILMED	DRAWING NUMBER	PAGE 01 of 01	REV
D	1:1		000-ED-173466-5		A

H+BND: V+4LA