REV.	DESCRIPTION	DRAWN / APPD.	DATE / DATE

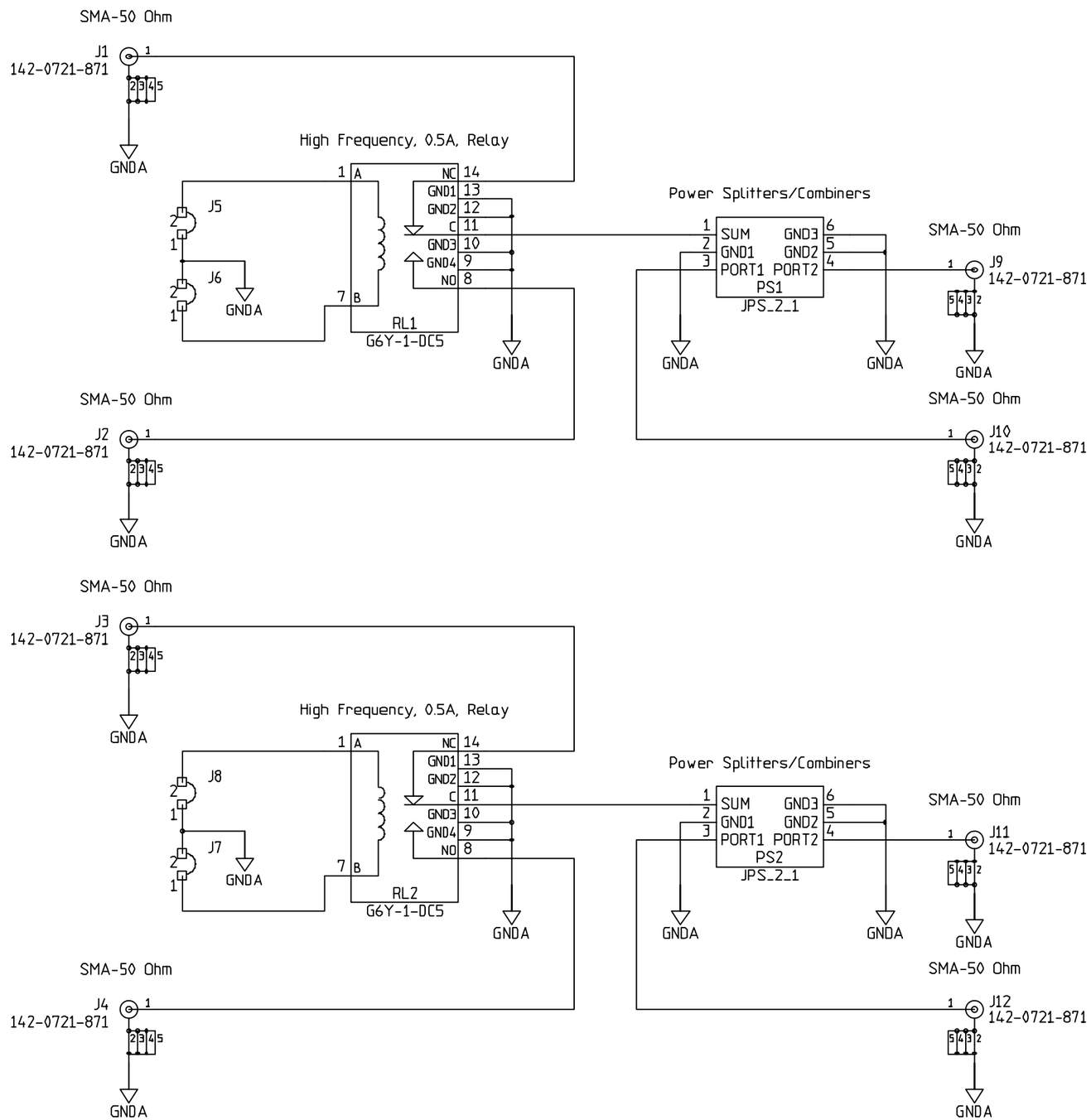

ITEM NO.	PART NO.	DESCRIPTION OR SIZE		QTY. REQ.
ORIGINATOR	DRENNAN	1/24/02	CHECKED	
DRAWN	N. CUNY	1/24/02	APPROVED	

FERMI NATIONAL ACCELERATOR LABORATORY
UNITED STATES DEPARTMENT OF ENERGY

CALIBRATION MODULE SCHEMATIC

SCALE	SOFTWARE	DRAWING NUMBER	REV.
NONE	AUTOCAD	0000-ED-173467-5	