REV.	DESCRIPTION	DRAWN	DATE
		APPD.	DATE

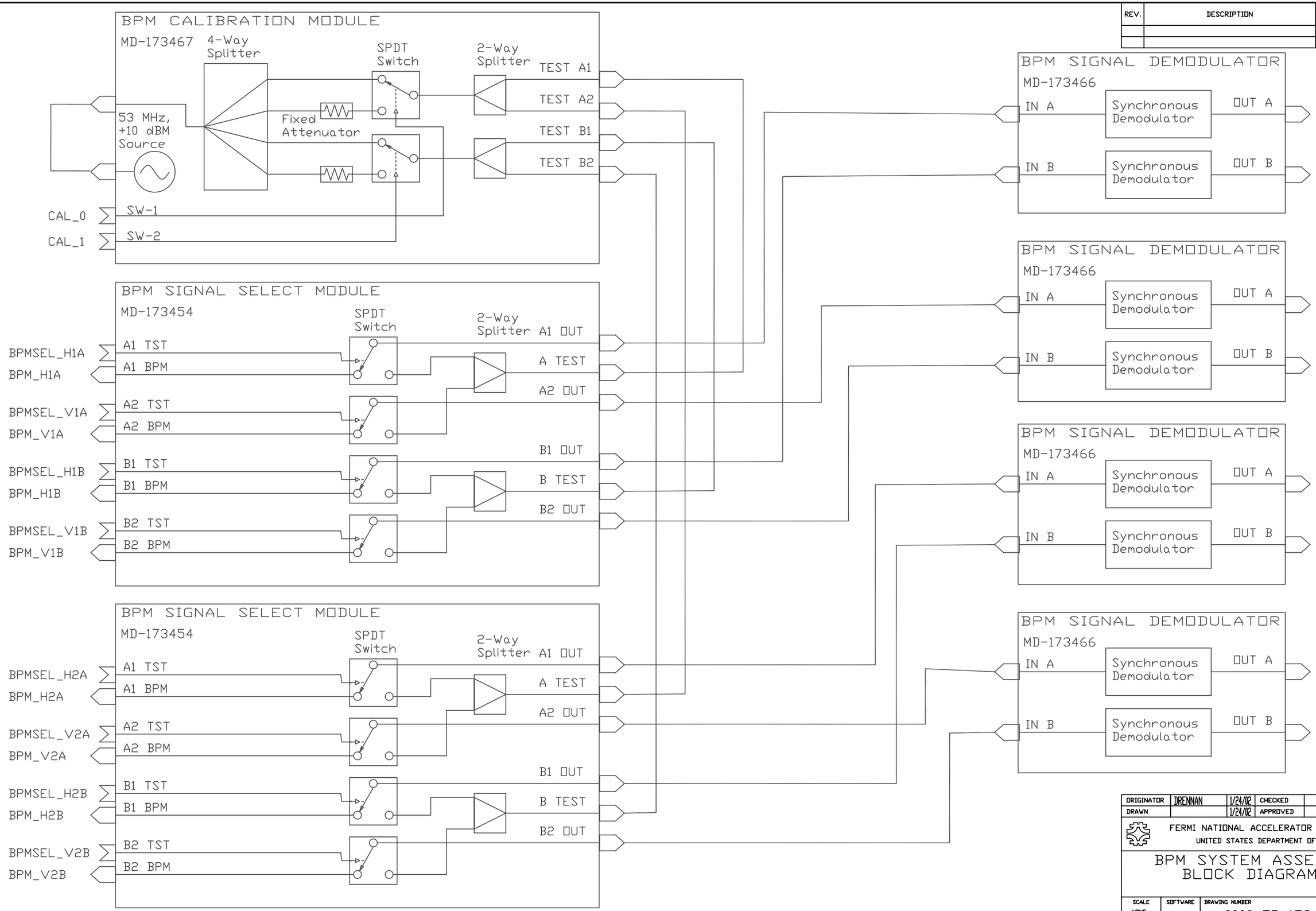

ORIGINATOR	DRENNAN	1/24/02	CHECKED		
DRAWN		1/24/02	APPROVED		

FERMI NATIONAL ACCELERATOR LABORATORY
UNITED STATES DEPARTMENT OF ENERGY

BPM SYSTEM ASSEMBLY BLOCK DIAGRAM

SCALE	SOFTWARE	DRAWING NUMBER	REV.
NONE	AUTOCAD	0000-ED-173469-2	