REV.	DESCRIPTION	DRAWN	DATE
		APPD.	DATE

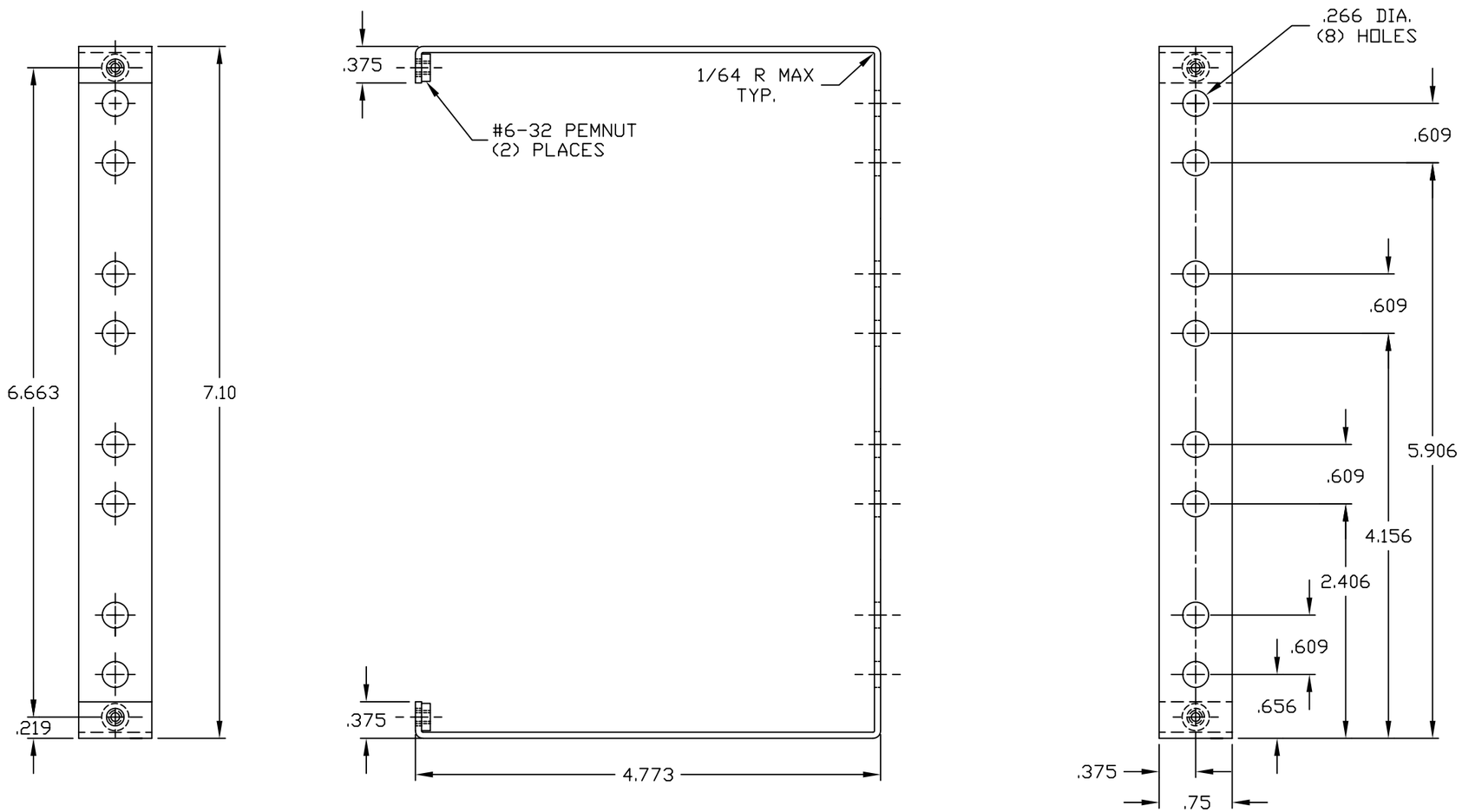

MATERIAL: 6061-T4 .050" THK. ALUMINUM

ORIGINATOR	C. DRENNAN	5/3/01	CHECKED		
DRAWN	N. CUNY	5/3/01	APPROVED		

FERMI NATIONAL ACCELERATOR LABORATORY
UNITED STATES DEPARTMENT OF ENERGY

BPM SELECT SELECT MODULE U-BRACKET SUPPORT

SCALE	SOFTWARE	DRAWING NUMBER	REV.
FULL	AUTOCAD	XXXX-MC-173454-6	