REV.	DESCRIPTION	DRAWN	DATE
		APPD.	DATE

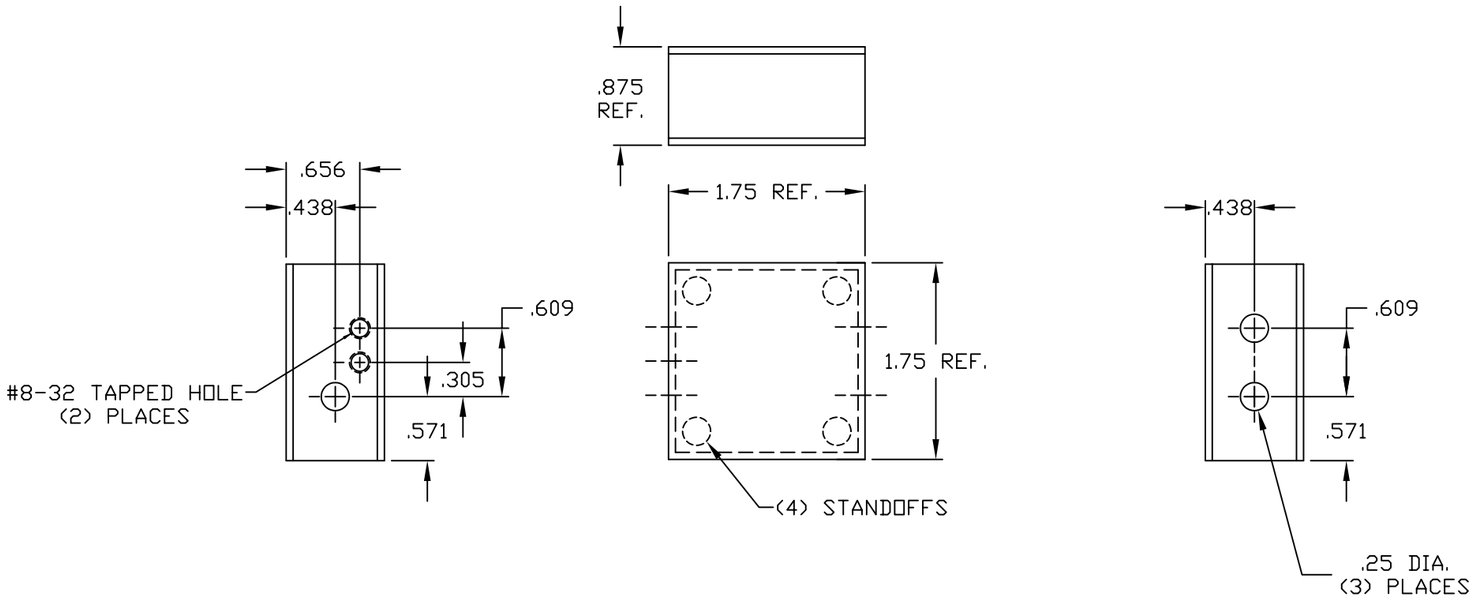

COMPAC DEVELOPMENT CORP.
PRODUCT NO. 51140-075-0

ORIGINATOR	C. DRENNAN	5/3/01	CHECKED		
DRAWN	N. CUNY	5/3/01	APPROVED		

FERMI NATIONAL ACCELERATOR LABORATORY
UNITED STATES DEPARTMENT OF ENERGY

BPM SIGNAL SELECT MODULE SWITCH/SPLITTER ENCLOSURE

SCALE	SOFTWARE	DRAWING NUMBER	REV.
FULL	AUTOCAD	XXXX-MC-173454-7	