REV.	DESCRIPTION	DRAWN / APPD.	DATE / DATE

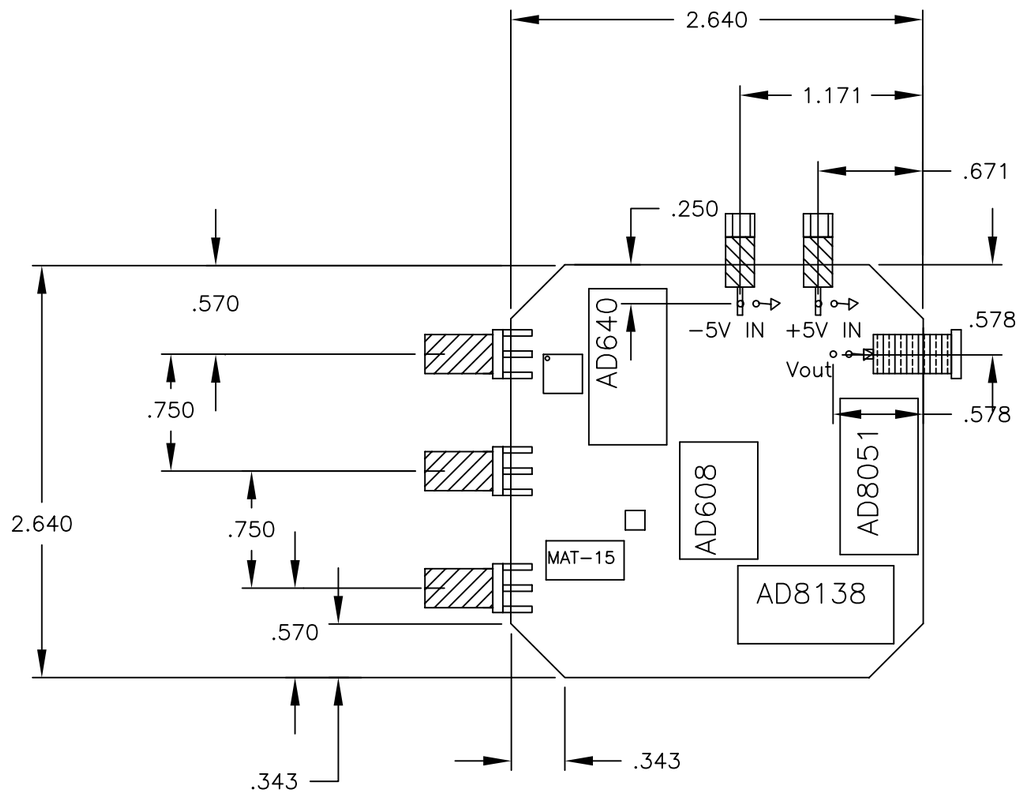

NOTE: SCHEMATIC LOCATED ON DRAWING 0000-ED-173466-5

ORIGINATOR	C. DRENNAN	1/18/02	CHECKED		
DRAWN	N. CUNY	1/18/02	APPROVED		

FERMI NATIONAL ACCELERATOR LABORATORY
UNITED STATES DEPARTMENT OF ENERGY

BPM SYNC. DEMODULATOR MODULE PC BOARD

SCALE	SOFTWARE	DRAWING NUMBER	REV.
FULL	AUTOCAD	0000-MC-173466-1	