REV.	DESCRIPTION	DRAWN / APPD.	DATE / DATE

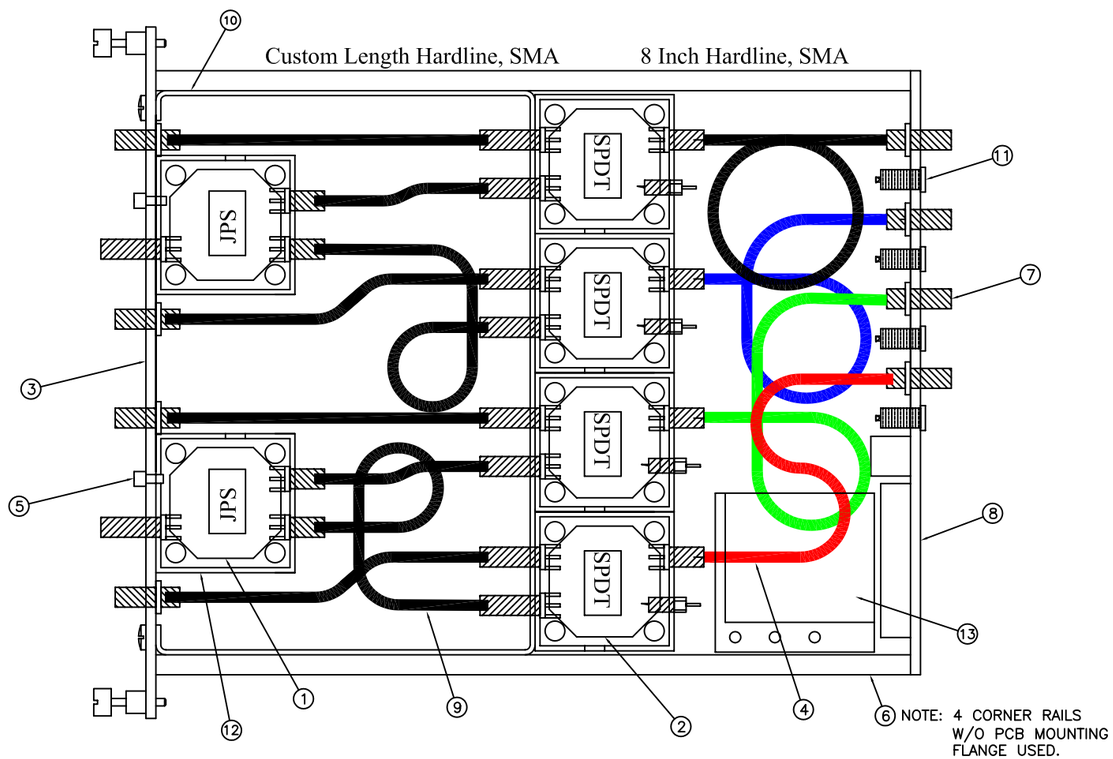

ITEM NO.	PART NO.	DESCRIPTION OR SIZE	QTY. REQ.
13	0000-EC-173454-10	POWER INPUT MODULE	1
12	0000-MC-173454-7	SWITCH/SPLITTER ENCLOSURE	6
11	1435-425000	CONNECTOR, RECEPTACLE, K-LOC, BULKHEAD, LEMO #ERA00250	3
10	0000-MC-173454-6	U-BRACKET SUPPORT	1
9	0000-MC-173454-5	CUSTOM CABLE ASSEMBLIES DETAIL	1
8	0000-MC-173454-4	NIM REAR PANEL SIGNAL SELECT MODULE	1
7	142-0901-401	CONNECTOR JACK TO BULKHEAD JACK, JOHNSON COMPONENTS 3 EACH	8
6	1440-410500 SEE NOTE	MODULE, NIM SINGLE WIDTH FNAL STOCK, PRECISION METAL FABRICATORS, P/N 01-002R	1
5	1440-300600	PRINTED CIRCUIT, NIM-2 KLUGE CARD, FNAL STOCK	1
4	HC141-08-0101	CABLE ASSEMBLY, 8 IN., 0.141 COAX W/SMA CONNECTORS HAVERHILL CABLE CORP.	1
3	0000-MC-173454-3	NIM FRONT PANEL, 8 3/4 IN. HIGH, FNAL STOCK, NSI P/N 21-001	1
2	0000-MC-173454-2	RF SPDT SWITCH	4
1	0000-MC-173454-1	2-WAY, 0° SPLITTER	2

ORIGINATOR	DRENNAN	5/2/01	CHECKED	
DRAWN	N. CUNY	5/2/01	APPROVED	

FERMI NATIONAL ACCELERATOR LABORATORY
UNITED STATES DEPARTMENT OF ENERGY

BPM SIGNAL SELECT MODULE ASSEMBLY

SCALE	SOFTWARE	DRAWING NUMBER	REV.
NONE	AUTOCAD	0000-MD-173454	