REV.	DESCRIPTION	DRAWN / APPD.	DATE / DATE
C	Increased center hole & added holes for handles	D.Huffman	Jan 20, 06

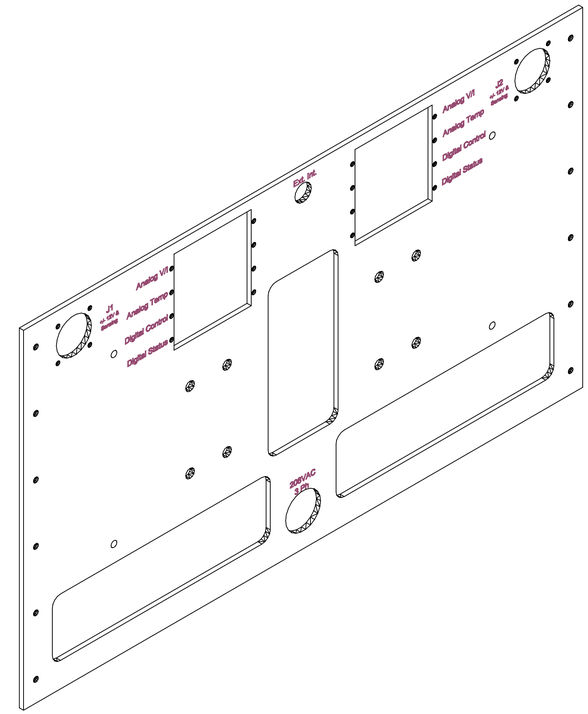

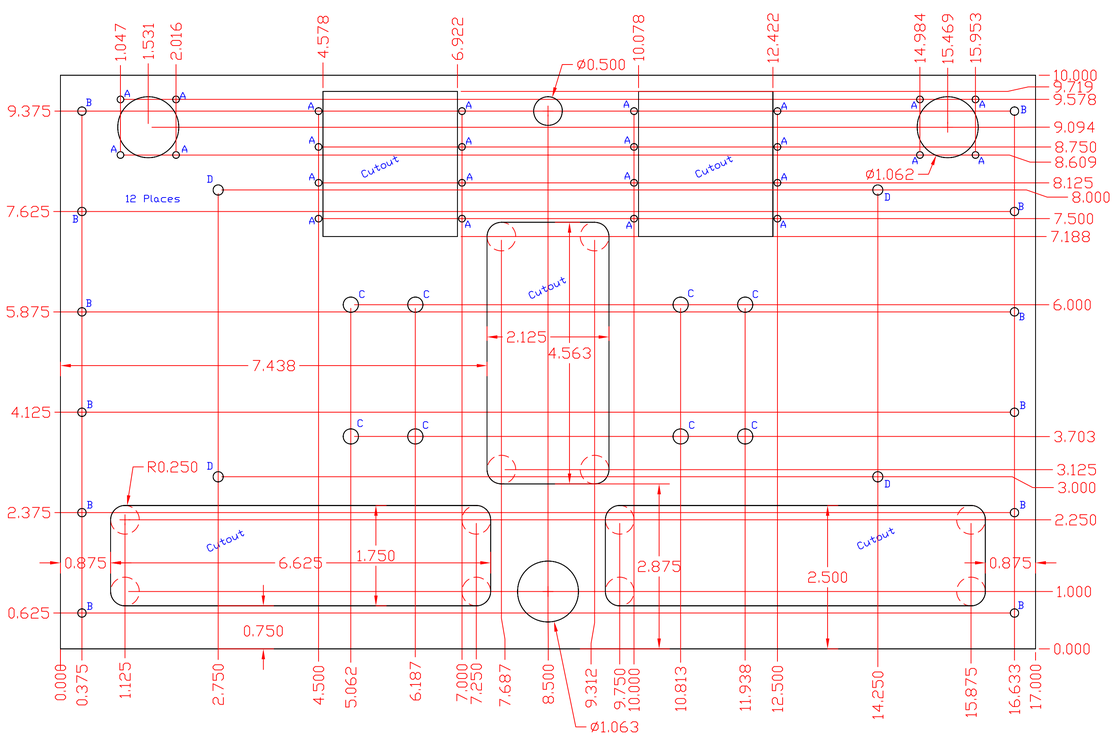

NOTE: All cutouts not specified can have sharp corners or minimum $\frac{1}{16}$" radius
A- Drill & Tap 4-40 thru 24 Places
B- Drill 0.146" Dia. 12 Places
C- Drill for 1/4"-20 Self Cinching Nut 8 Places
D- Drill 0.177" Dia. 4 Places

ITEM	PART NO.	DESCRIPTION OR SIZE	QTY.
PARTS LIST			

UNLESS OTHERWISE SPEC.			DESIGNATION	D.L. Huffman	01-20-06
FRACTIONS	DECIMALS	ANGLES	DRAWN		
			CHECKED		
			APPROVED		
Tol. +-0.01"			USED ON		
			MATERIAL-	1/4" Proline Back Panel 62-005 or 6061-T6 Alum stock	

FERMI NATIONAL ACCELERATOR LABORATORY
UNITED STATES DEPARTMENT OF ENERGY

L1 MUON
Back Panel Layout

SCALE	FILMED	DRAWING NUMBER	REV.
		3823-122-MB-330571	C