THIS DRAWING IS UNPUBLISHED. RELEASED FOR PUBLICATION -,- .
© COPYRIGHT - BY TYCO ELECTRONICS CORPORATION. ALL RIGHTS RESERVED.

LOC	DIST
G	14

REVISIONS

P	LTR	DESCRIPTION	DATE	DWN	APVD
	F	REDRAWN PER 0G3A-0383-04	25MAY04	JR	MS

1 TONGUE MATERIAL THK IS .070±.003

2 COPPER PER ASTM B152

3 TIN PLATE PER ASTM B545, ANNEALED

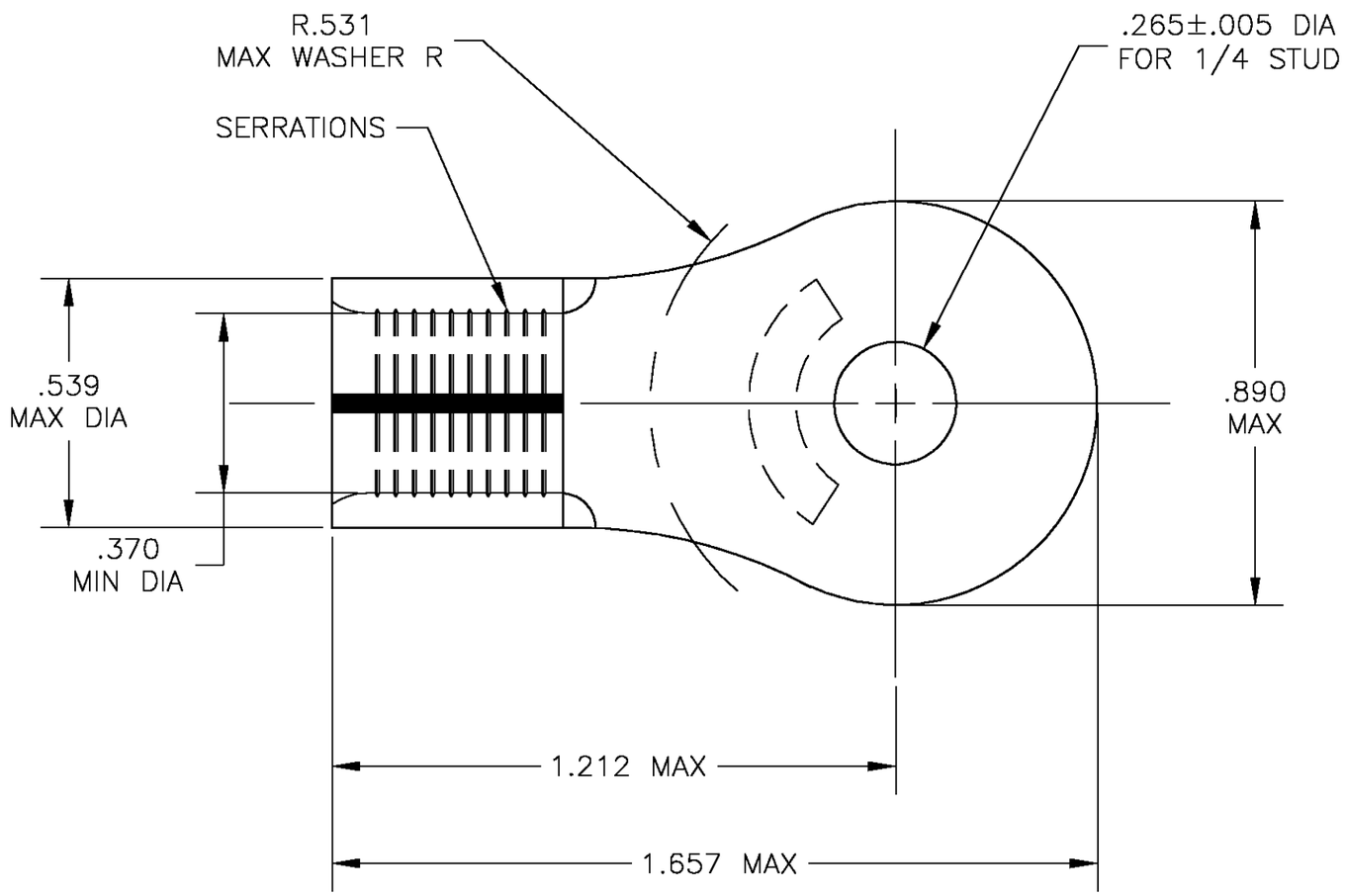

QTY	DESCRIPTION	PART NO
1	WIRE TERMINAL	320138-0

THIS DRAWING IS A CONTROLLED DOCUMENT.

DIMENSIONS: INCHES

TOLERANCES UNLESS OTHERWISE SPECIFIED:
0 PLC ± –
1 PLC ± –
2 PLC ± –
3 PLC ± .008
4 PLC ± –
ANGLES ± 5°

MATERIAL – 2

FINISH – 3

DWN jr ruth 25MAY04
CHK MJ SPICER 25MAY04
APVD MJ SPICER 25MAY04
PRODUCT SPEC –
APPLICATION SPEC –
WEIGHT –

CUSTOMER DRAWING

Tyco Electronics Corporation
Harrisburg, PA 17105

NAME
WIRE TERMINAL
SOLISTRAND – RING TONGUE
WIRE SIZE: #2

SIZE	CAGE CODE	DRAWING NO	RESTRICTED TO
A3	00779	C-320138	–

SCALE	SHEET	REV
3:1	1 OF 1	F