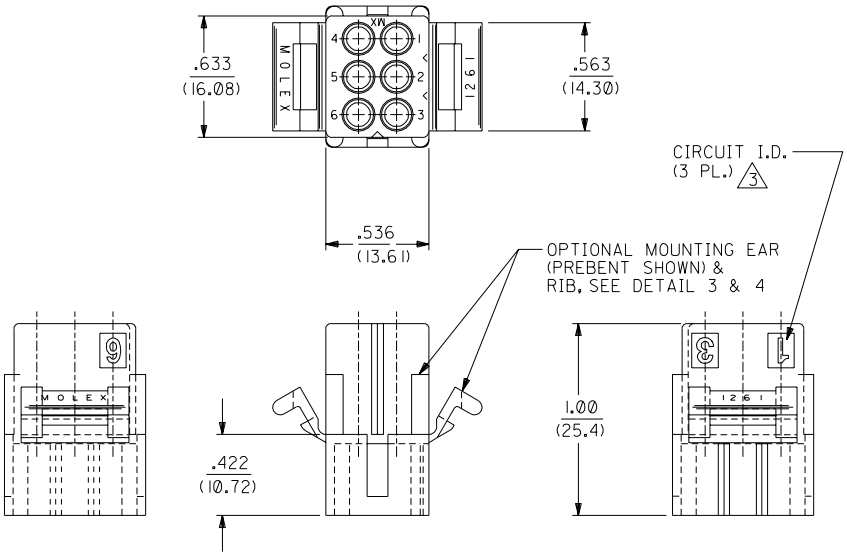

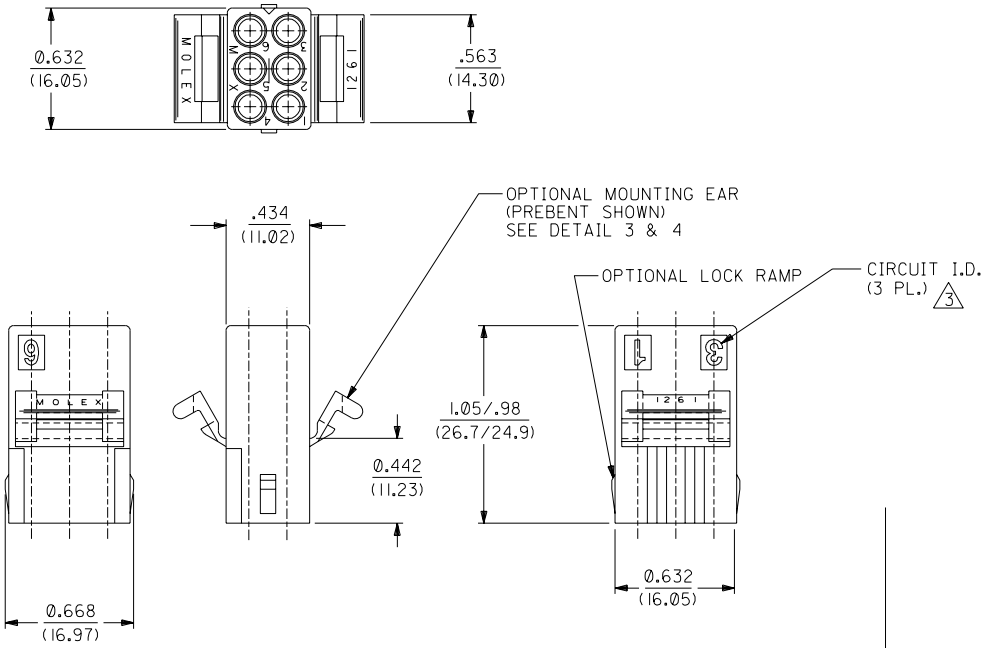

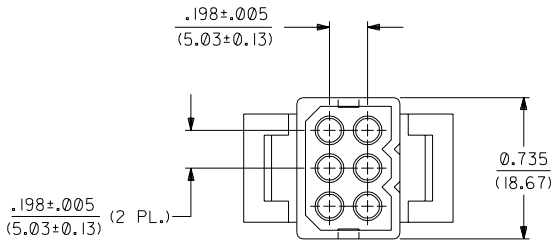

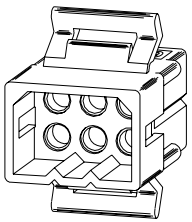

PLUG

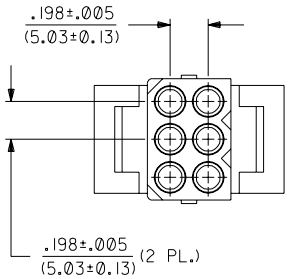

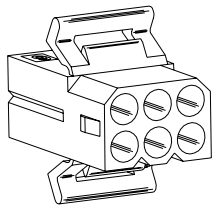

RECEPTACLE

MKG.	SH.	REV.	LTR.	REVISIONS
	2	X2	X2	ADD -P1-300&R3-300 UCP2003-1992 ELHAG 03-03-20
	1	X2	X1	REVISED UCR1998-0140 WANG 98-04-09
			X	REVISE PER ECR U1 1800 GK 5/28/92 RW
			W	CORRECTED DIM. ECN # U1 0808 4-19-91 RW
			V	REV'D. & REDRAWN PER ECR U9 1099 11/6/89 COMSTOCK

DIMENSIONS SHOWN (METRIC) INCH

UNLESS OTHERWISE SPECIFIED TOLERANCES: ANGULAR ± DMS 2°

	INCH	METRIC
3 PLACE	± .007	---
2 PLACE	± .010	± 0.18
1 PLACE	---	± 0.25

DRAFT WHERE APPLICABLE MUST REMAIN WITHIN DIMENSIONS

DRWG. BY GK | CHK'D. BY RW
APP'D. BY GWF | SCALE 2:1

REVISE ONLY ON CAD SYSTEM

TITLE .093/(2.36) HOUSING, PLUG AND RECEPTACLE, 6 CKT., .198/(5.03) CTRS.

molex MOLEX INCORPORATED LISLE, ILL. 60532 U.S.A.

SHEET NO. 1 of 2 | DATE 11/6/89

PART NO. SEE CHART | DRWG. NO. SD-1261-*

FILE NAME H126 X1 S04

THIS DRAWING CONTAINS INFORMATION THAT IS PROPRIETARY TO MOLEX INC. AND SHOULD NOT BE USED WITHOUT WRITTEN PERMISSION.

DIV. CP | SIZE C

PLUG	
PART NO.	ENG. NO.
03-09-2061	1261-P △4
23-09-2061	1261-P-100
03-09-2062	1261-P1
23-09-2062	1261-P1-100
03-09-7061	1261-PBK △4
03-09-7062	1261-P1BK
27-09-2093	1261-P1-200
50-29-0099	1261-P1-300

RECEPTACLE	
PART NO.	ENG. NO.
03-09-1061	1261-R
23-09-1061	1261-R-100
03-09-1062	1261-R1
23-09-1062	1261-R1-100
03-09-1063	1261-R2
23-09-1063	1261-R2-100
03-09-1064	1261-R3
27-09-1063	1261-R2-200
03-09-6064	1261-R3BK
03-09-6063	1261-R2BK
03-09-6062	1261-R1BK
03-09-6061	1261-RBK
50-29-1500	1261-R3-300

LEGEND: PLUG

1261-P***-***

P = PLUG

BLANK = PLUG WITH PREBENT MOUNTING EARS

1 = PLUG WITHOUT MOUNTING EARS

COLOR: BLANK=NATURAL COLOR

AM=AMBER BK=BLACK BU=BLUE

BN=BROWN GY=GRAY GN=GREEN

OR=ORANGE RD=RED YW=YELLOW

MATERIAL: BLANK = NYLON 6/6, U.L. 94V-2

100 = POLYPROPYLENE, U.L. 94V-0

200 = NYLON 6/6, U.L. 94V-0, RED

300 = NYLON 6/6, U.L. 94V-2, BLACK UV RESISTANT

LEGEND: RECEPTACLE

1261-R***-***

R = RECEPTACLE

BLANK = WITH STD. MOUNTING EARS, WITH LOCK RAMPS

1 = WITH STD. MOUNTING EARS, WITHOUT LOCK RAMPS

2 = WITHOUT MOUNTING EARS, WITHOUT LOCK RAMPS

3 = WITHOUT MOUNTING EARS, WITH LOCK RAMPS

4 = WITH PREBENT MOUNTING EARS, WITH LOCK RAMPS

5 = WITH PREBENT MOUNTING EARS, WITHOUT LOCK RAMPS

COLOR: BLANK=NATURAL COLOR

AM=AMBER BK=BLACK BU=BLUE

BN=BROWN GY=GRAY GN=GREEN

OR=ORANGE RD=RED YW=YELLOW

MATERIAL: BLANK = NYLON 6/6, U.L. 94V-2

100 = POLYPROPYLENE, U.L. 94V-0

200 = NYLON 6/6, U.L. 94V-0, RED

300 = NYLON 6/6, U.L. 94V-2, BLACK UV RESISTANT

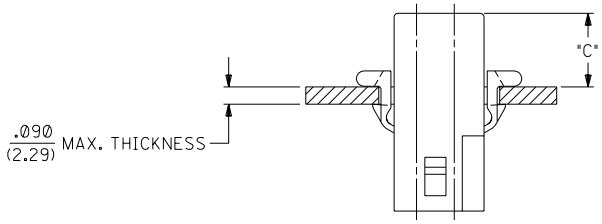

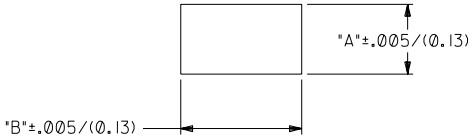

MOUNTING HOLE CUTOUT

HOUSING	DIM. "A"	DIM. "B"	DIM. "C" (STD. EAR)	DIM. "C" (PREBENT)
PLUG	.750/(19.05)	.695/(17.65)	.39/(9.9)	.40/(10.1)
RECEPTACLE	.718/(18.24)	.600/(15.24)	.40/(10.1)	.41/(10.3)

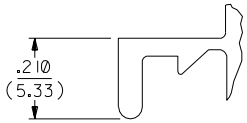

DETAIL 3

.093/(2.36) STANDARD MOUNTING EAR
(SCALE 4:1)

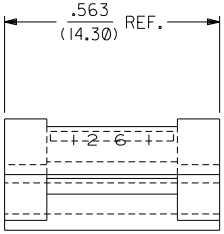

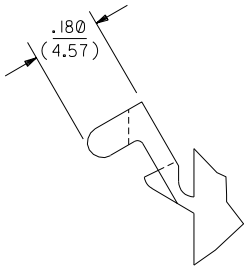

DETAIL 4

.093/(2.36)PREBENT MOUNTING EAR
(SCALE 4:1)

NOTES:

1 THESE PARTS COMPLY WITH MOLEX PRODUCT SPEC. 02-09.

2 HOUSINGS FOR USE WITH MOLEX .093/(2.36) PIN AND SOCKET TERMINALS.

△3 CIRCUIT I.D. NUMBERS ON SIDE OF HOUSING APPEAR ON PARTS FROM TOOLS BUILT AFTER 9/3/91.

△4 WHERE DENOTED IN CHART, TOOLS ARE BUILT WITH PREBENT MOUNTING EARS PER DETAIL 4 AND SUPERSEDE ALL TOOLS PREVIOUSLY BUILT WITH THE STANDARD MOUNTING EAR.

LTR.	REVISIONS	LTR.	REVISIONS
		X2	SEE SHEET 1
		X1	SEE SHEET 1
		X	SEE SHEET 1
		V	SEE SHEET 1

DIMENSIONS SHOWN (METRIC) INCH

UNLESS OTHERWISE SPECIFIED TOLERANCES: ANGULAR ±2°

	INCH	METRIC
3 PLACE	± .007	---
2 PLACE	± .010	± 0.18
1 PLACE	---	± 0.25

DRAFT WHERE APPLICABLE MUST REMAIN WITHIN DIMENSIONS

DRWG. BY GVC CHK'D. BY RW

APP'D. BY GWF SCALE 4 : 1

▽ = 0 ▼ = 0 REVISE ONLY ON CAD SYSTEM

TITLE .093/(2.36) HOUSING, PLUG AND RECEPTACLE, 6 CKT., .198/(5.03) CTRS.

MOLEX INCORPORATED LISLE, ILL. 60532 U.S.A.

SHEET NO. 2 DATE 11/10/89

PART NO. SEE CHART DRWG. NO. SD-1261-*

FILE NAME H126IX1 305

THIS DRAWING CONTAINS INFORMATION THAT IS PROPRIETARY TO MOLEX INC. AND SHOULD NOT BE USED WITHOUT WRITTEN PERMISSION.

DIV. CP SIZE C