REV.	DESCRIPTION	DRAWN	DATE
		APPD.	DATE

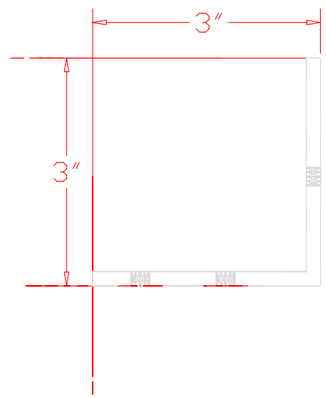

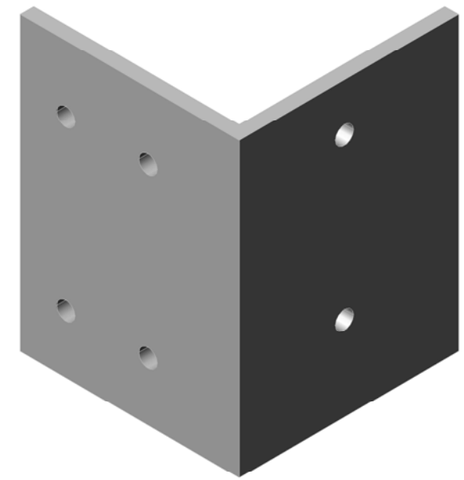

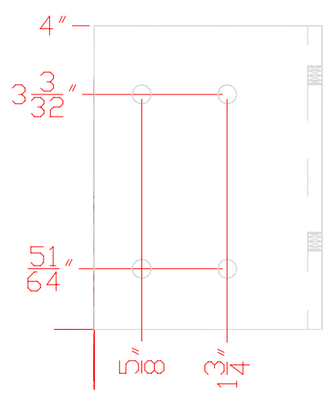

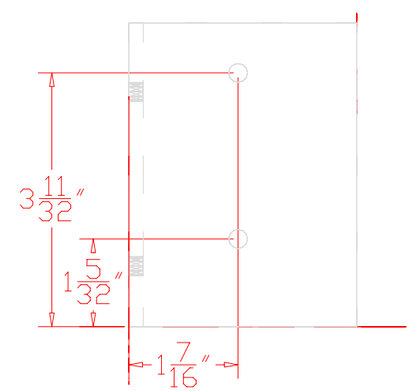

Note: ALL HOLES ARE DRILLED 5/16″THRU.

ITEM	PART NO.	DESCRIPTION OR SIZE	QTY.
		PARTS LIST	

UNLESS OTHERWISE SPEC.		GENERATED	David Huffman	2006-03-14
FRACTIONS	DECIMALS	ANGLES	DRAWN	
			CHECKED	
			APPROVED	
			USED ON	
			MATERIAL- 3"x3" x 1/8" Ultra Corrosion-Resistant Architectural Aluminum (Alloy 6063)	

FERMI NATIONAL ACCELERATOR LABORATORY
UNITED STATES DEPARTMENT OF ENERGY

L1 MUON Right
SB 175 Output Bracket

SCALE	FILMED	DRAWING NUMBER	REV.
		3823-122-MB-330574	D