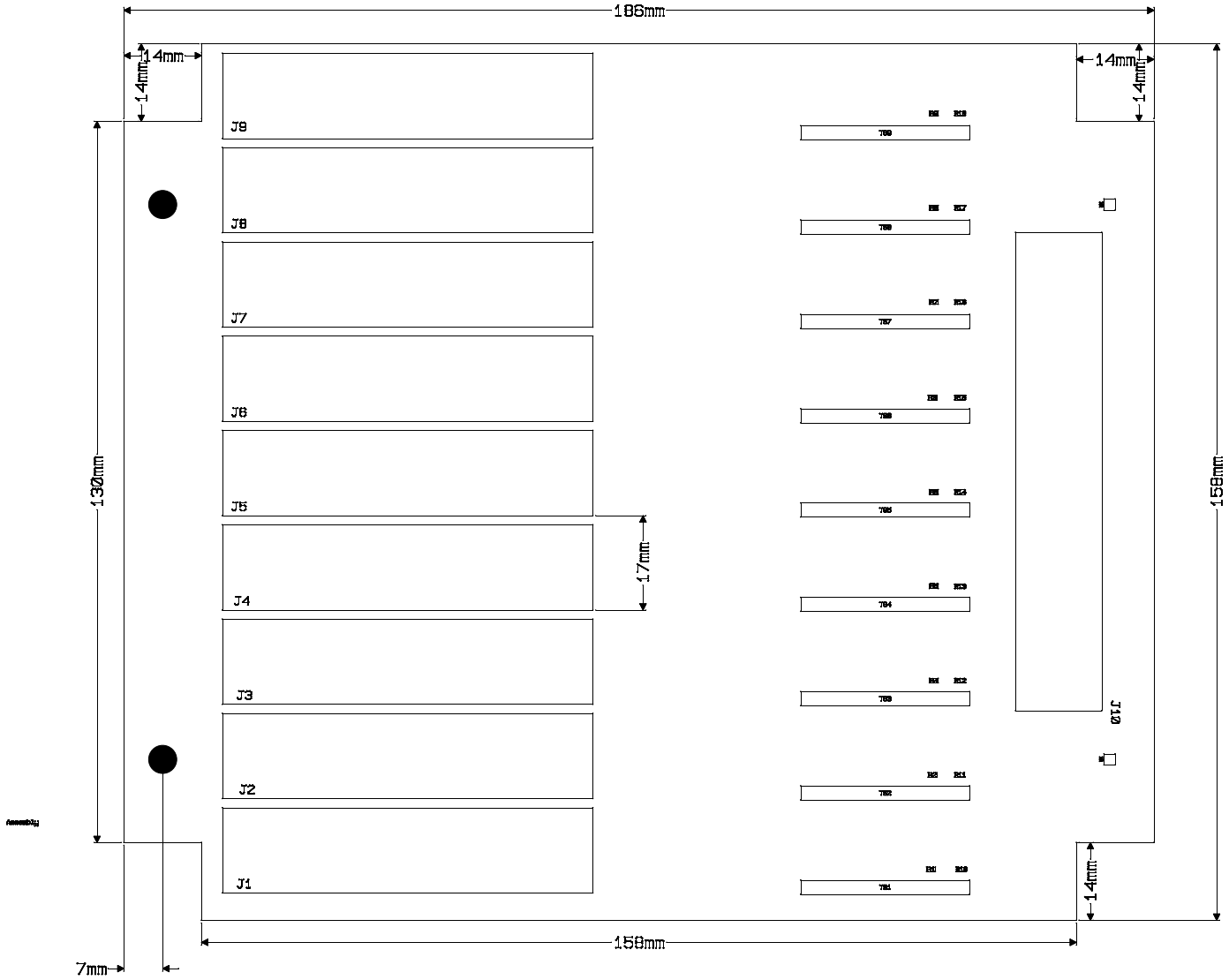
186mm
14mm
14mm
14mm
14mm
14mm
130mm
158mm
158mm
17mm
7mm
J9
J8
J7
J6
J5
J4
J3
J2
J1
J10

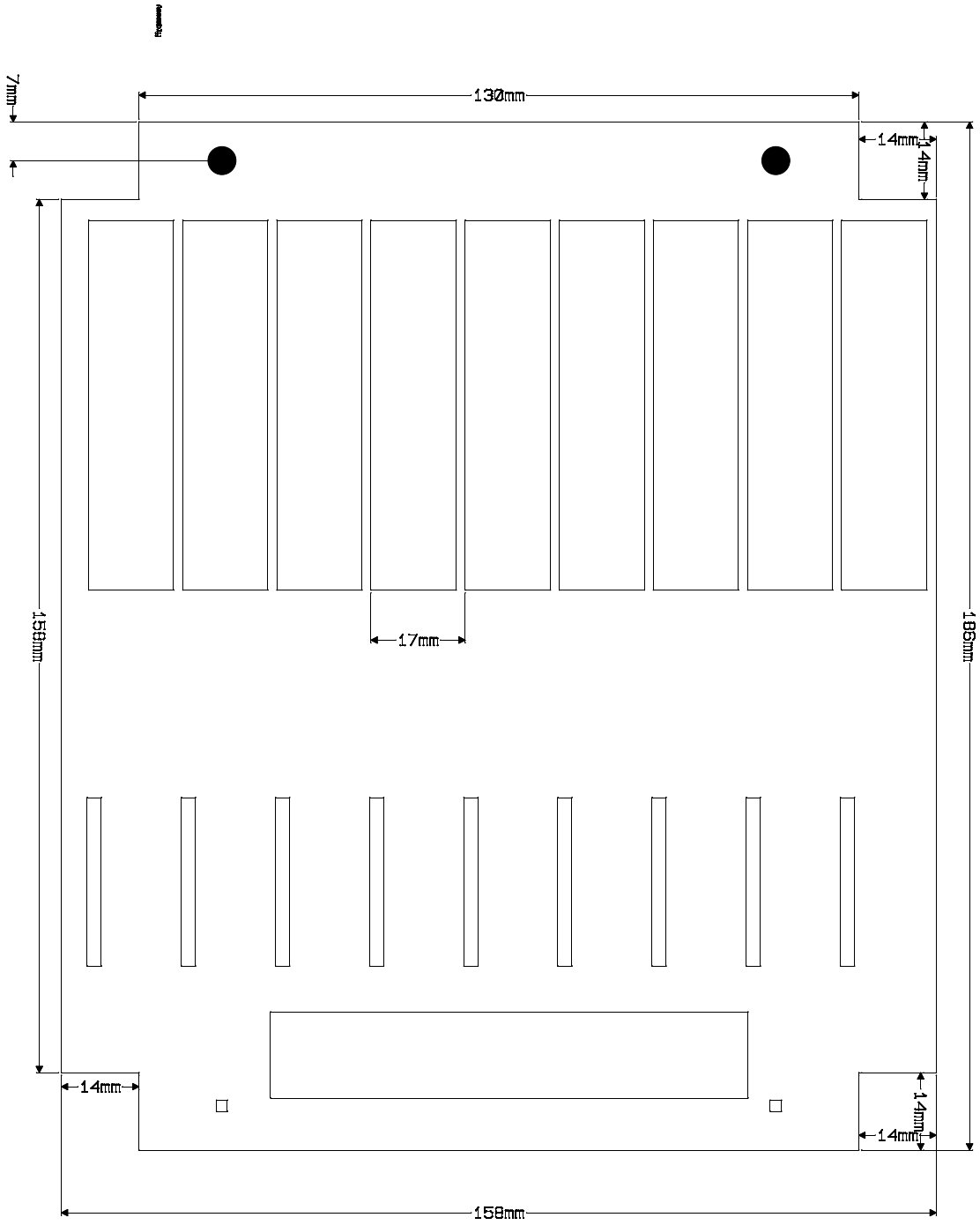
7mm
130mm
14mm
14mm
158mm
17mm
186mm
14mm
14mm
14mm
158mm

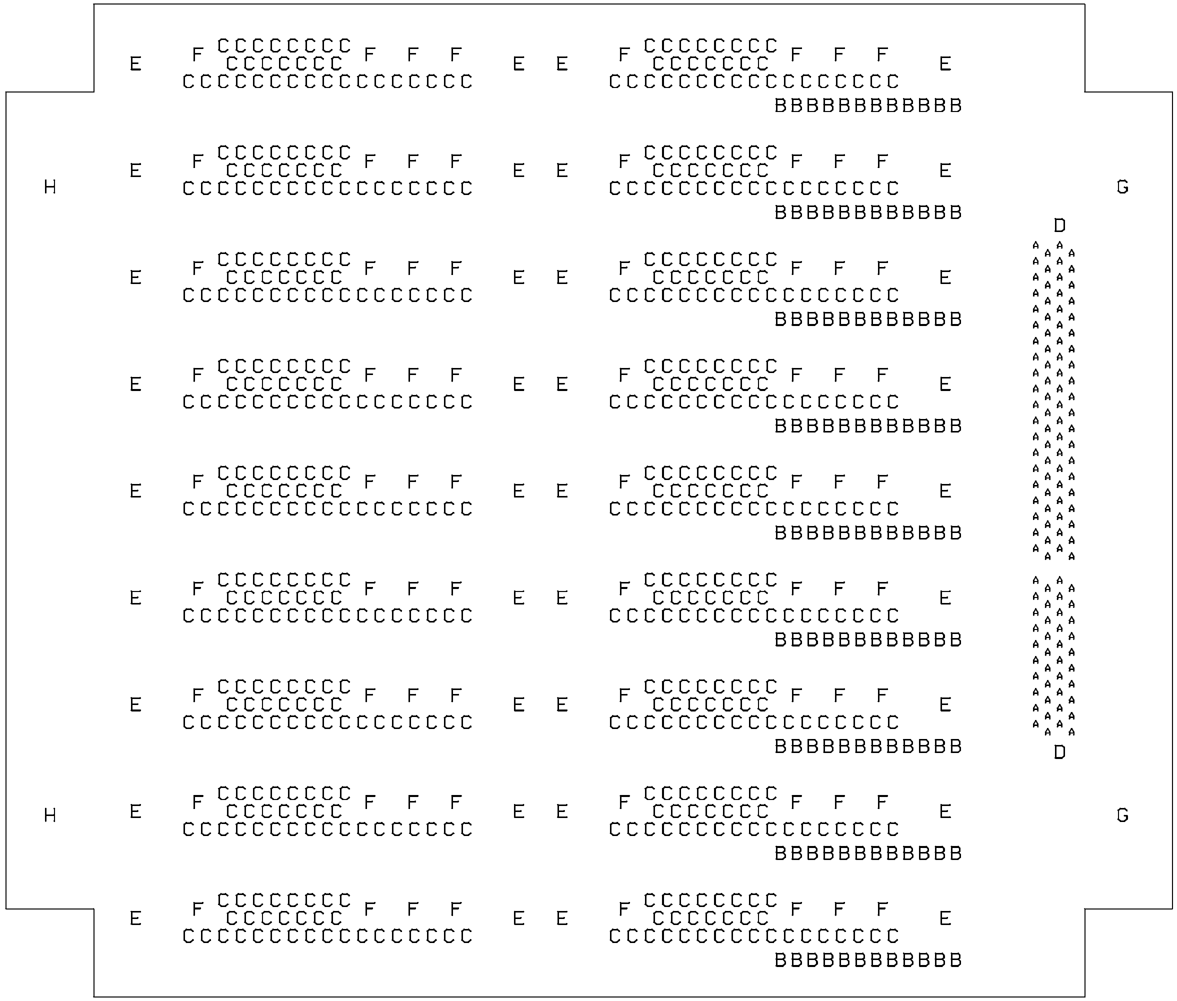

Through Holes						
Symbol	Diameter (in)	Tolerance (in)	Plated	Punched	Hole Name	Quantity
A	0.0230	+/- 0.0030	Yes	No	23th +/-3	120
B	0.0400	+/- 0.0030	Yes	No	40th +/-3	108
C	0.0450	+/- 0.0030	Yes	No	45th +/-3	576
D	0.0620	+/- 0.0030	Yes	No	62th +/-3	2
E	0.1230	+/- 0.0030	Yes	No	123th +/-3	36
F	0.1450	+/- 0.0030	Yes	No	145th +/-3	72
G	0.1969	+/- 0.0039	Yes	No	Rnd 5 +/-Tol 0.1	2
H	0.2010	+/- 0.0080	No	No	201th +/-8, non-plated	2

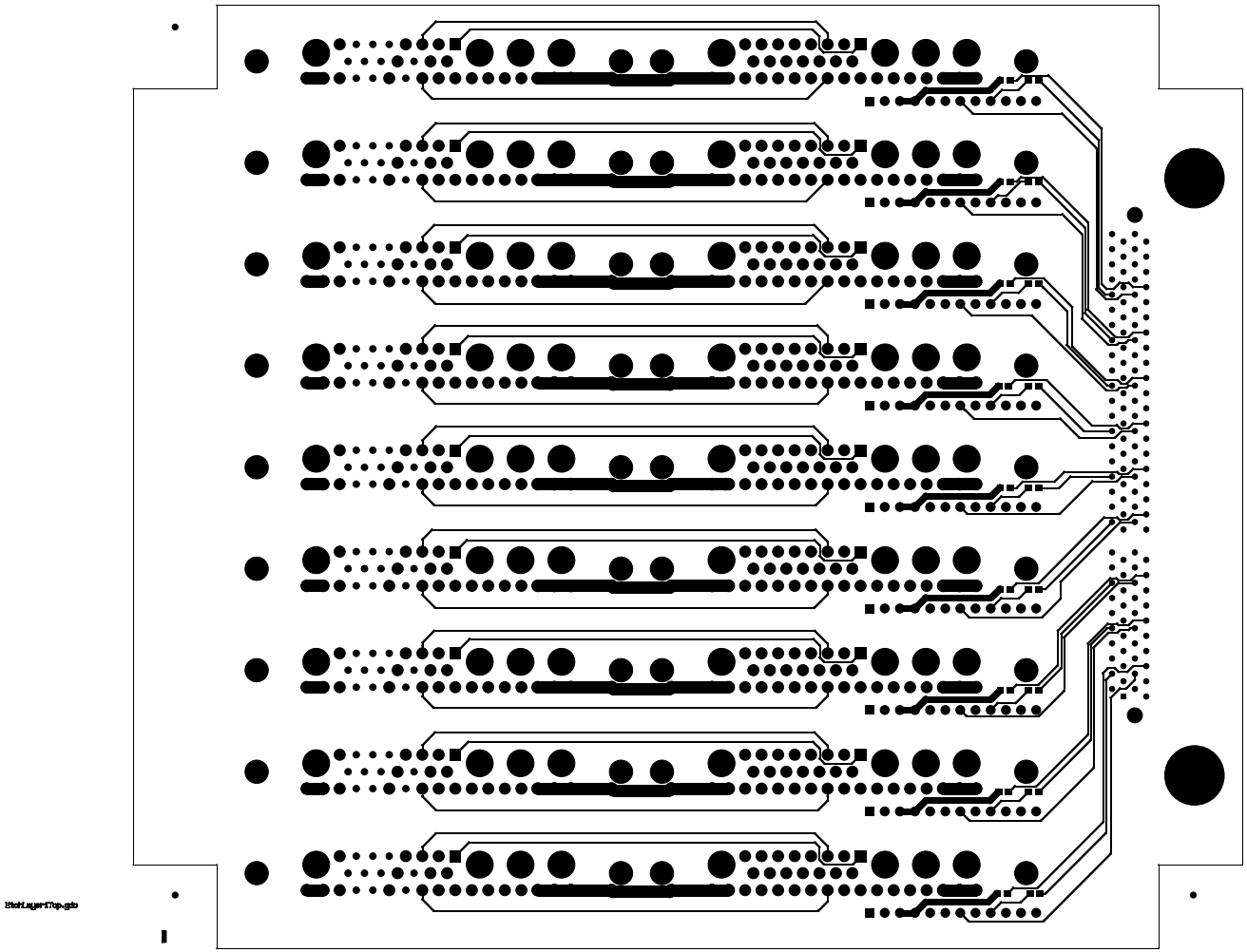

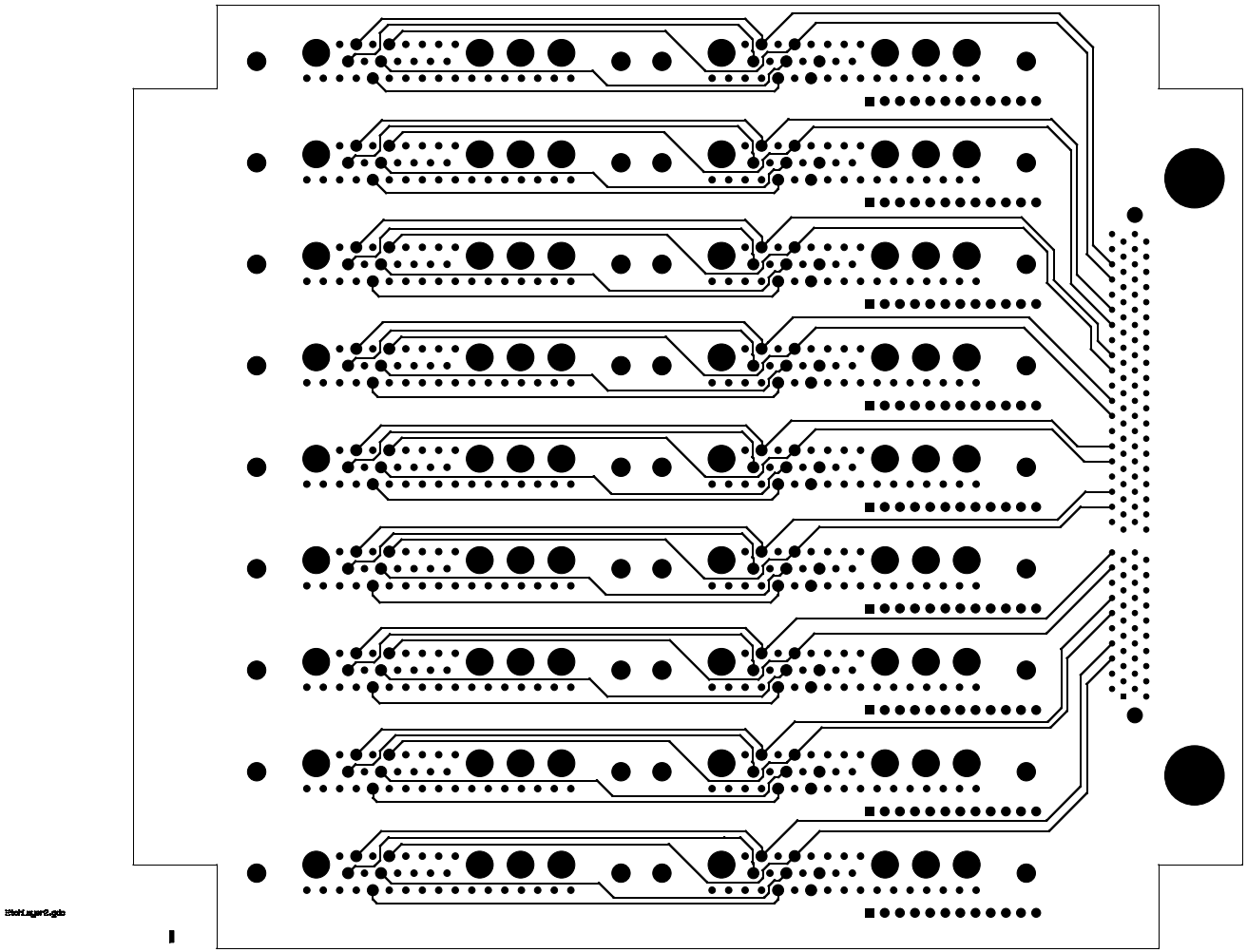
BlockLayer2.gdo

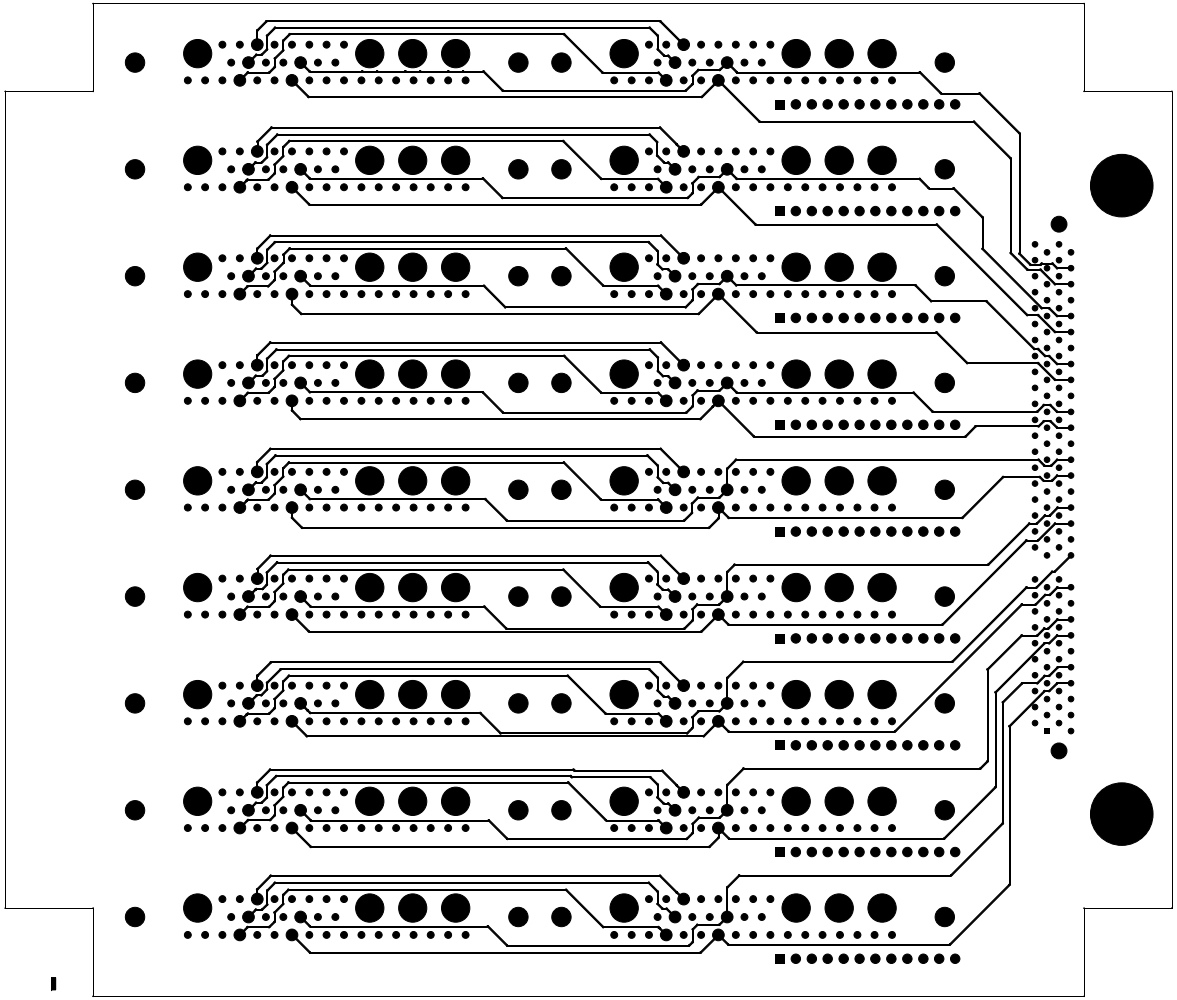

BotLayer3.gdo

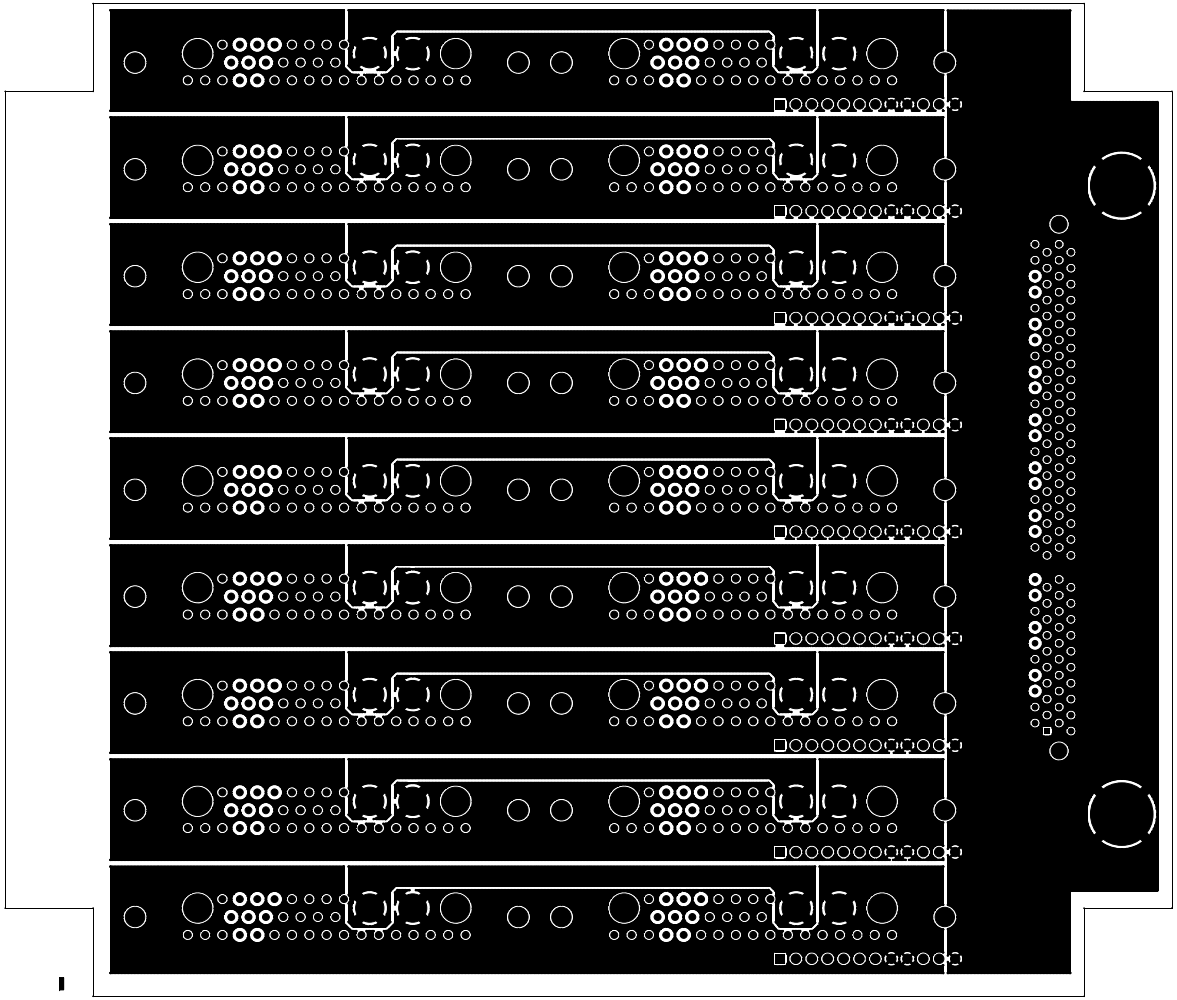

EtchLayer4.gdo

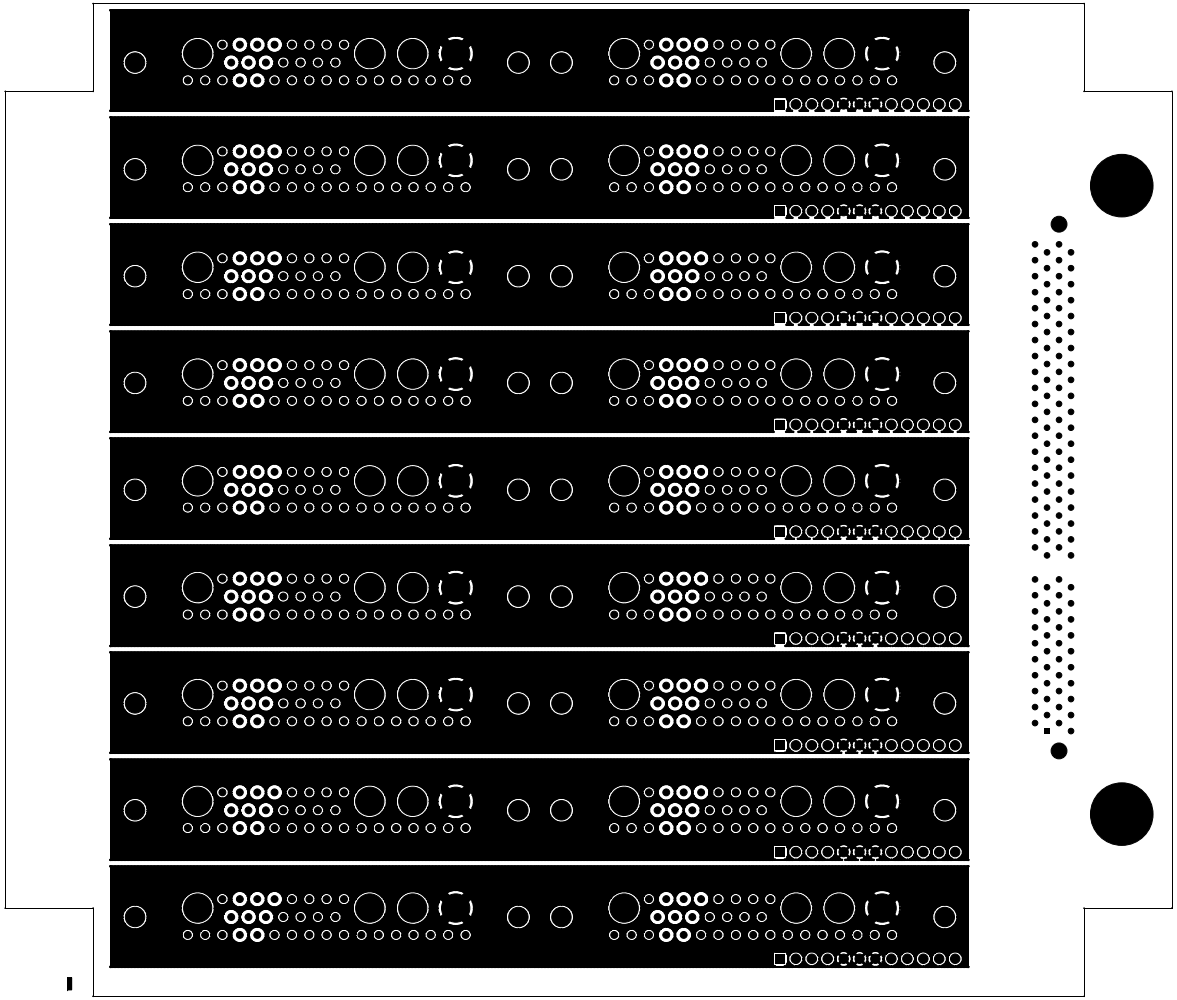

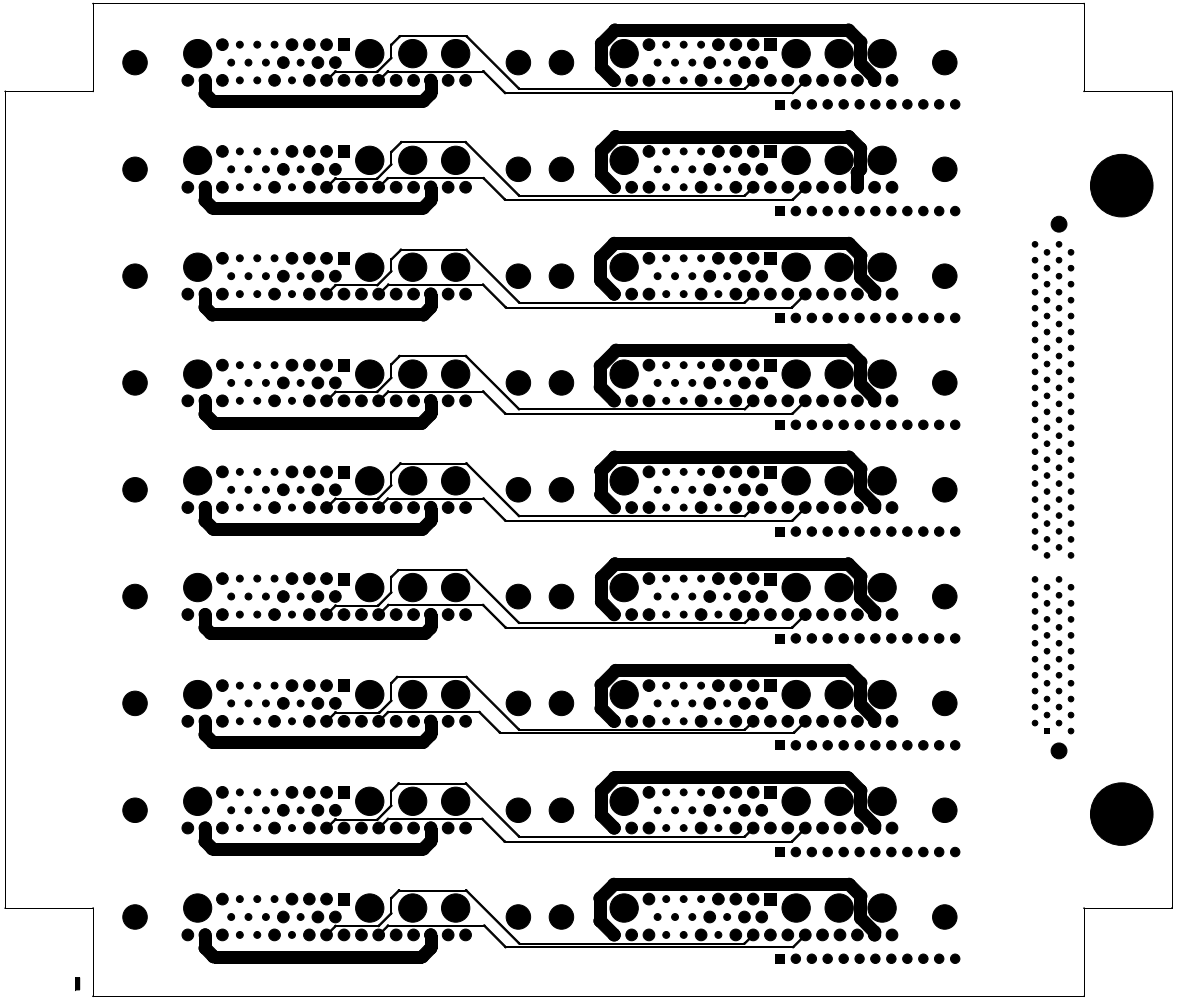

HichLayer8.gdo

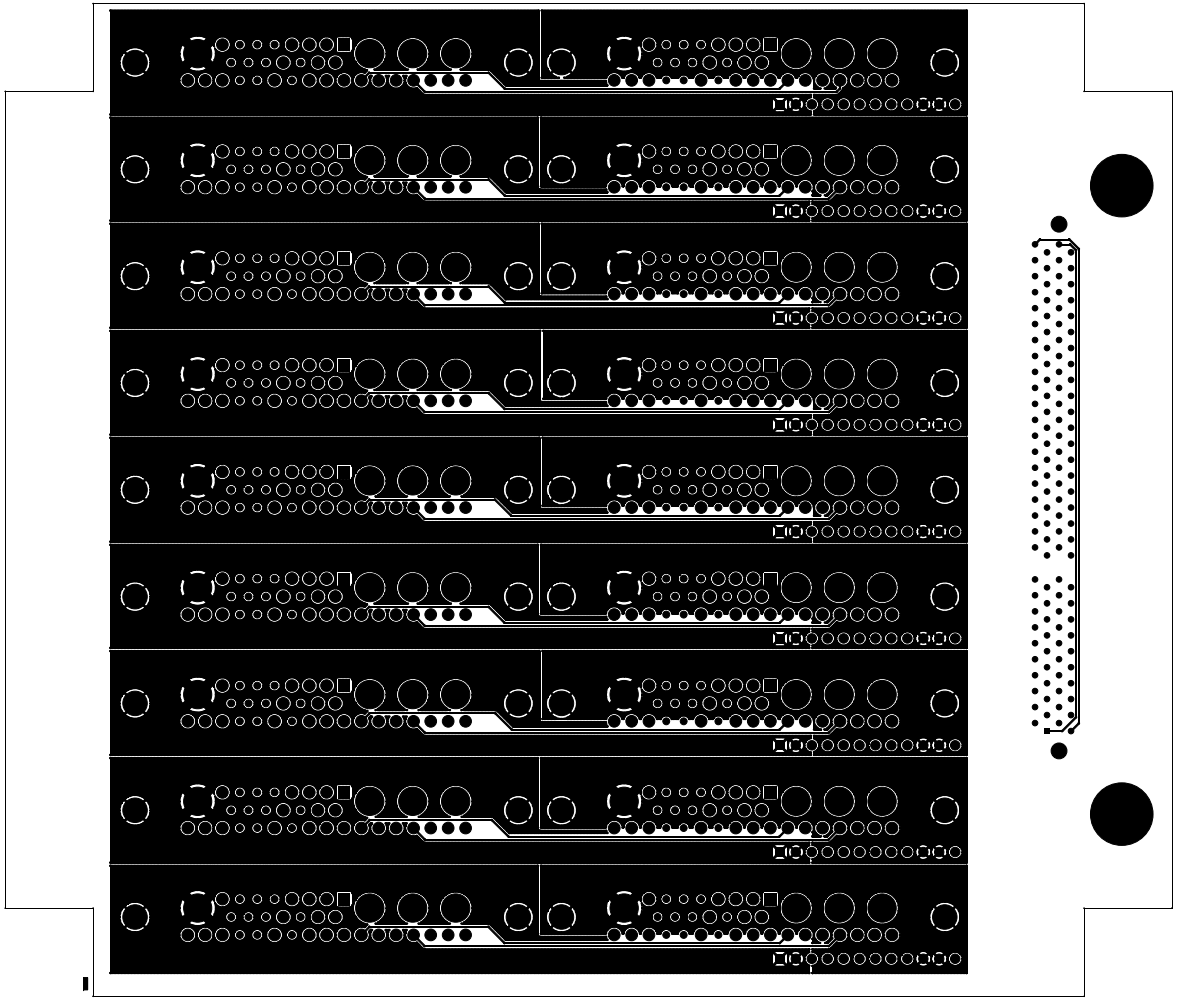

EtchLayer7.gdb

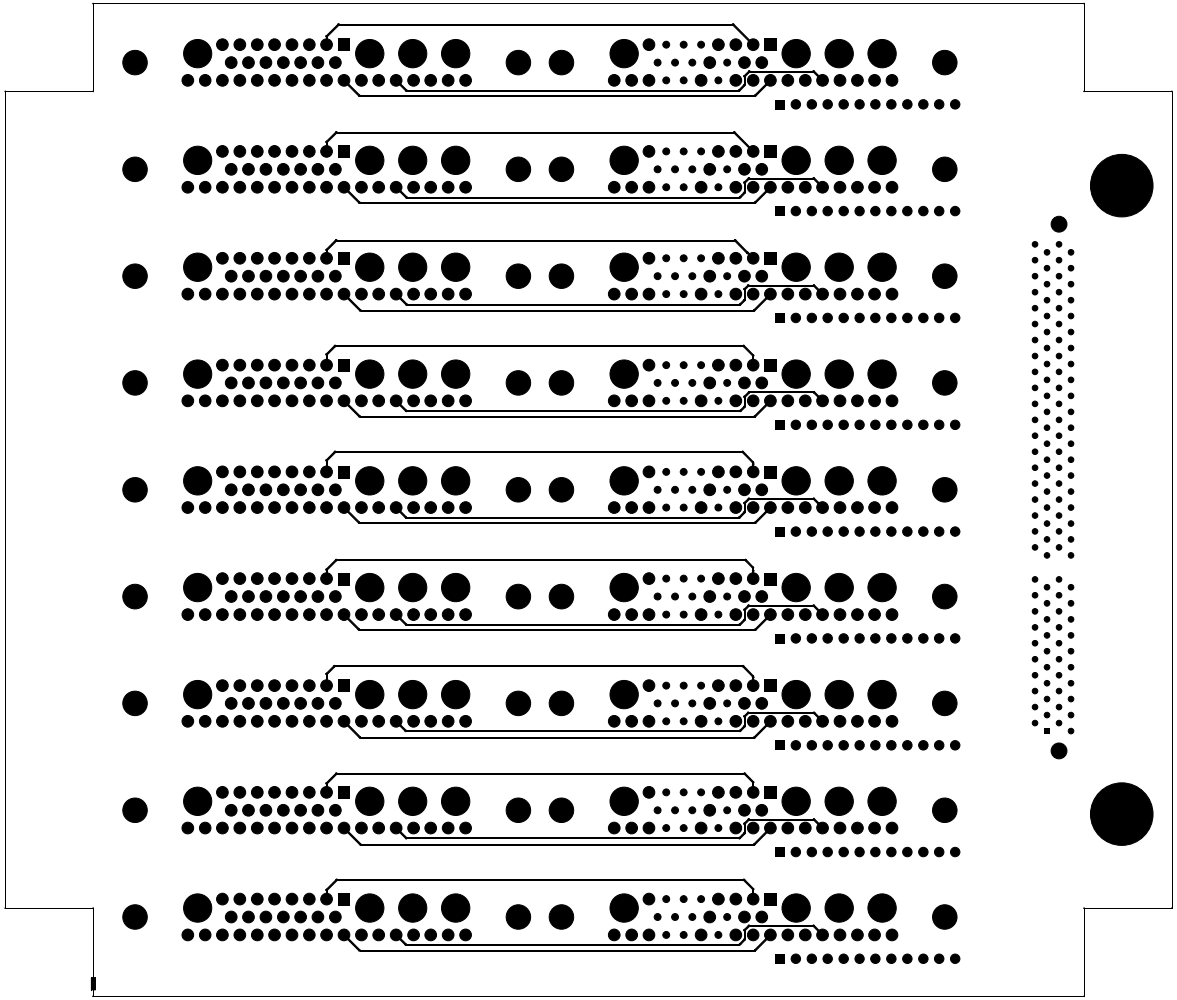

LitchLayer@Bottom.gdo

Sitzordnung
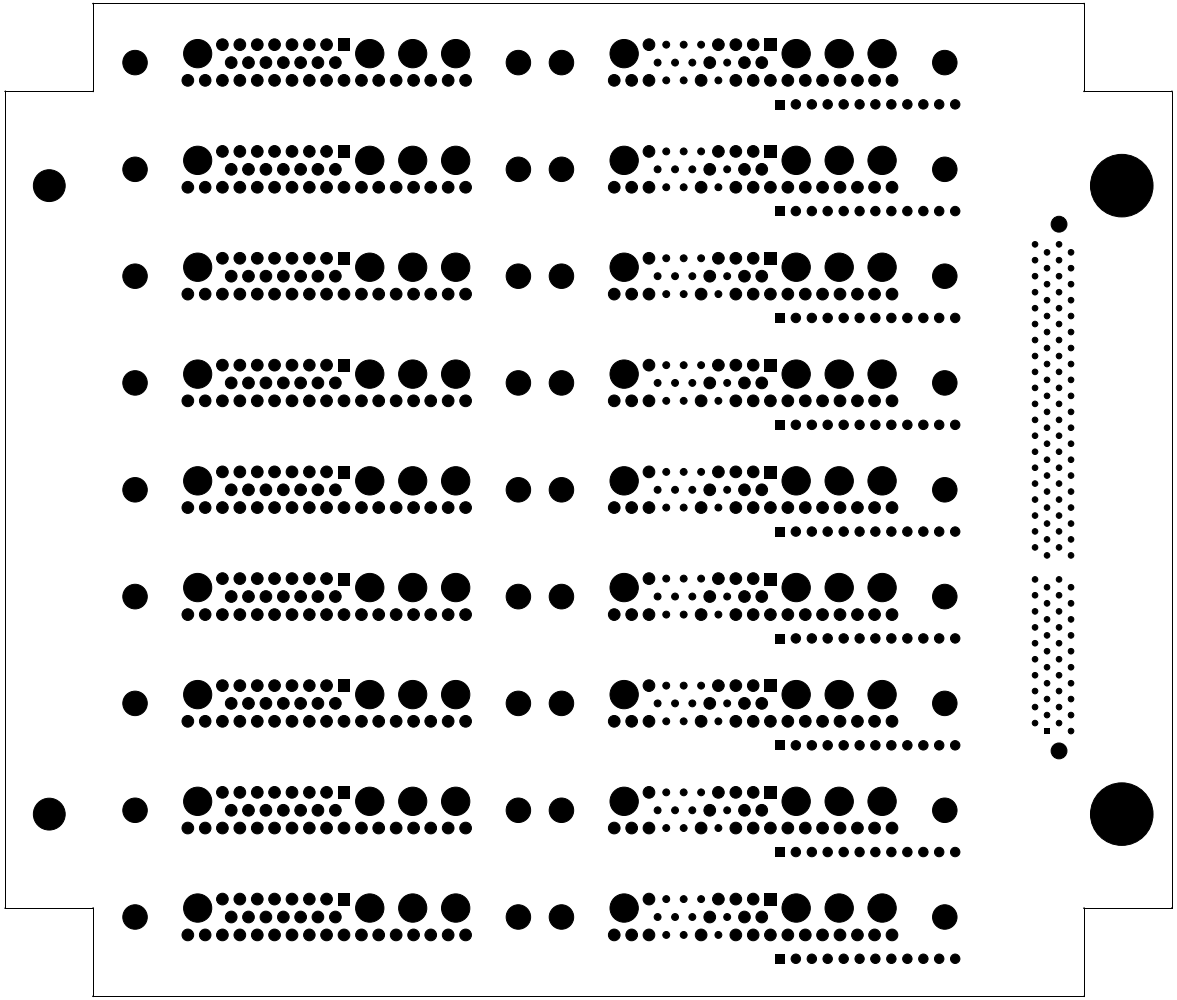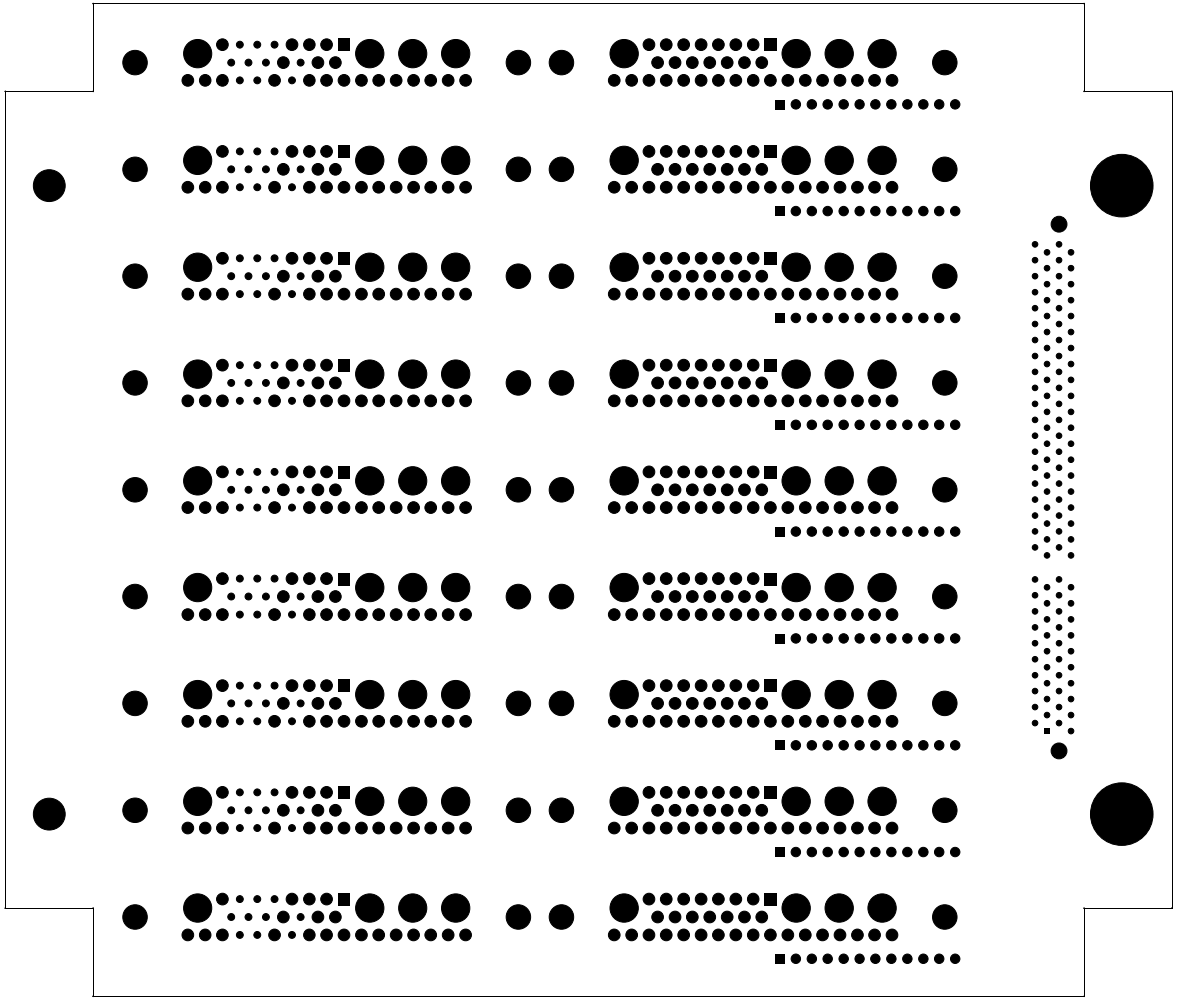
US CMS Tracker Patch Panel Interface (PPI)
FNAL DOcument # 3882.138-EB-330588 - Rev C
D.H./J.G./M.J. Sept. 27, 2006
J9
J8
J7
J6
J5
J4
J3
J2
J1
TS9
TS8
TS7
TS6
TS5
TS4
TS3
TS2
TS1
J10
HIGH & LOW VOLT MON.
Silk Top
Stack-Up Diagram