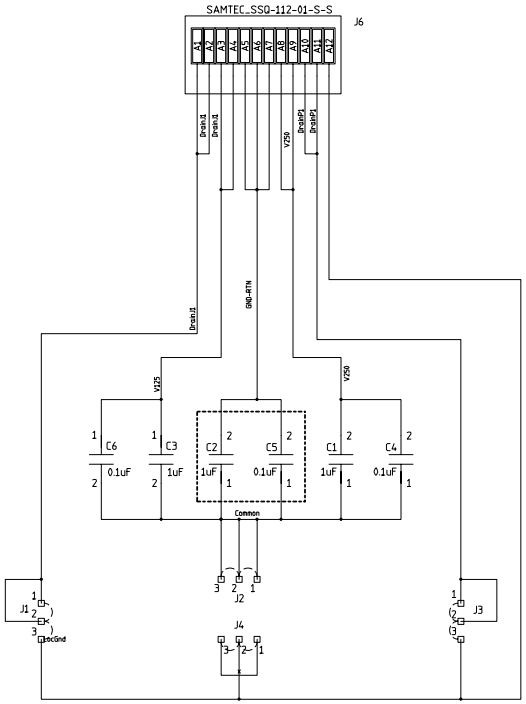

NOTE: One configuration requires 0 Ohms across C2 & C5

MODFIED 9/28/2006 8:46:57 AM			
EED Department	ORIGINATOR	David Huffman	DATE Sept. 19, 2006
	DRAWN	David Huffman	DATE Sept. 19, 2006
	CHECKED	checked	DATE date
	APPROVED	approved	DATE date

Fermi National Accelerator Laboratory
United States Department of Energy

F:\CMS_TrackerCab\electrical\daughter\daughter.prj

. Daughter Card

SIZE	DRAWING NUMBER		REV
D	3892.138-EB-330586	Schematic Page 01 of 01	A

H=BND: V=4LA