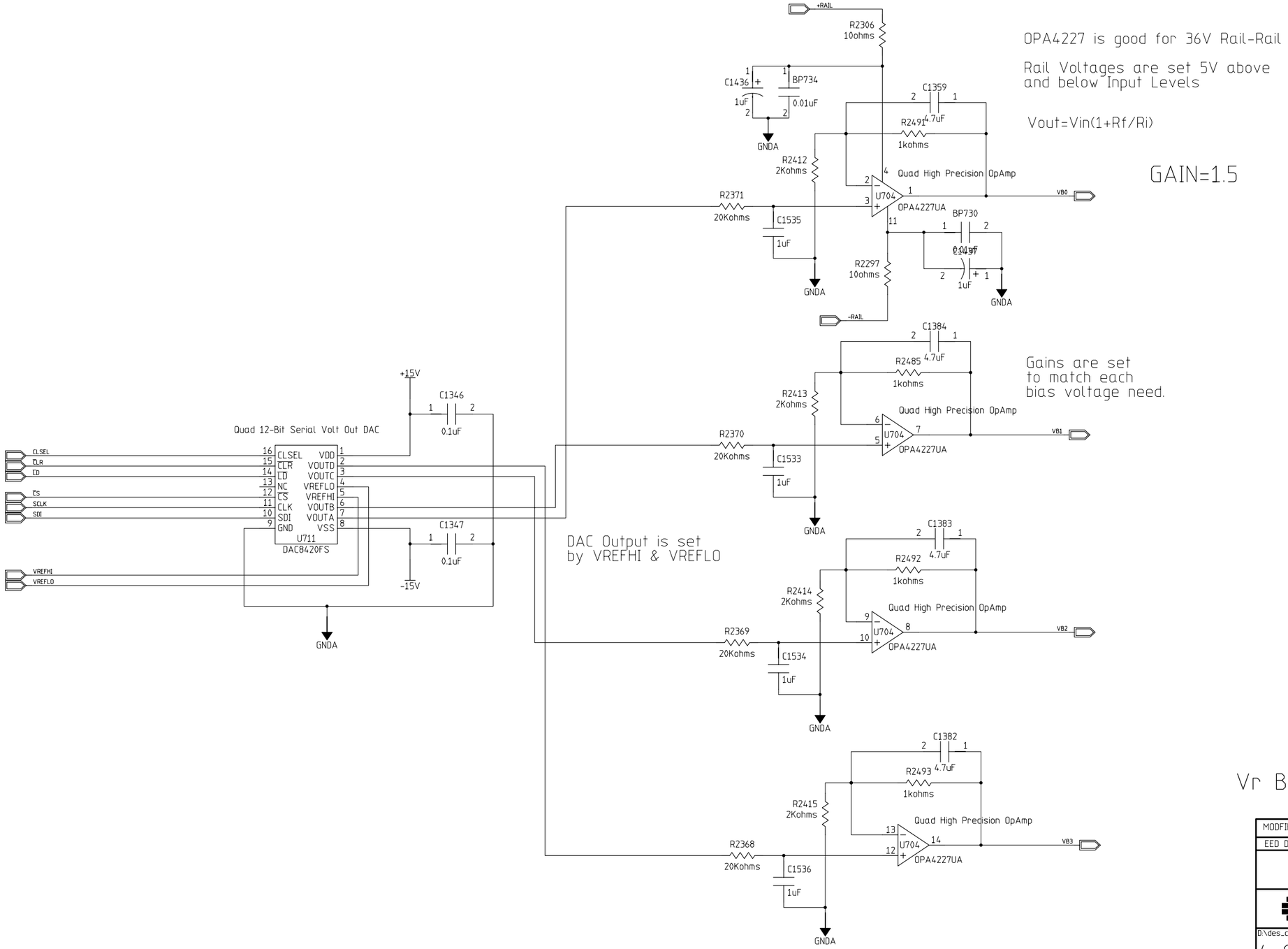

OPA4227 is good for 36V Rail-Rail

Rail Voltages are set 5V above
and below Input Levels

Vout=Vin(1+Rf/Ri)

GAIN=1.5

Gains are set
to match each
bias voltage need.

Vr BIAS CHANNELS 28-31

MODFIED 2006-02-23 11:34:20 AM			
EED Department	ORIGINATOR	Mark Kozlovsky	DATE 2005/11/03
	DRAWN	David Huffman	DATE Nov. 3, 2005
	CHECKED	checked	DATE date
	APPROVED	approved	DATE date

Fermi National Accelerator Laboratory
United States Department of Energy

D:\des_camera\ccdacq_sch_monsoon\ccdacq_schematic.prj

4 Channel Buffer DAC - VR

SIZE	DRAWING NUMBER	REV
D	drawing number (Schematic Page 01 of 01)	C

H=8ND, V=4LA