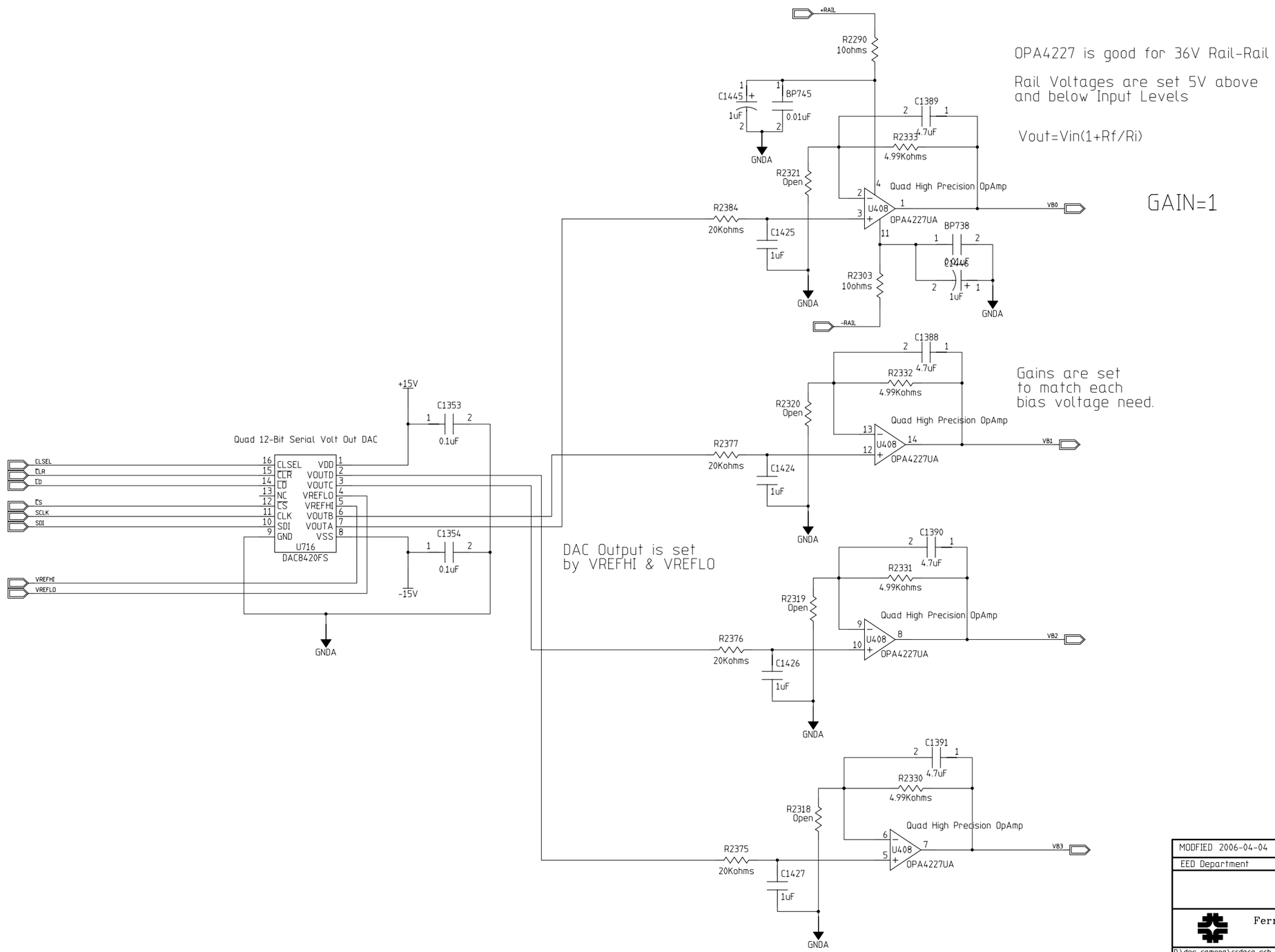

MODFIED 2006-04-04 4:48:54 PM			
EED Department	ORIGINATOR	Mark Kozlovsky	DATE 2005/11/03
	DRAWN	David Huffman	DATE Nov. 3, 2005
	CHECKED	checked	DATE date
	APPROVED	approved	DATE date

Fermi National Accelerator Laboratory
United States Department of Energy

D:\des_camera\ccdacq_sch_monsoon\ccdacq_schematic.prj
4 Channel Buffered DAC - VSUB Ramp Control
BIAS 0,1

SIZE	DRAWING NUMBER	REV
D	drawing number Schematic Page 01 of 01	C

H=BND. V=4LA