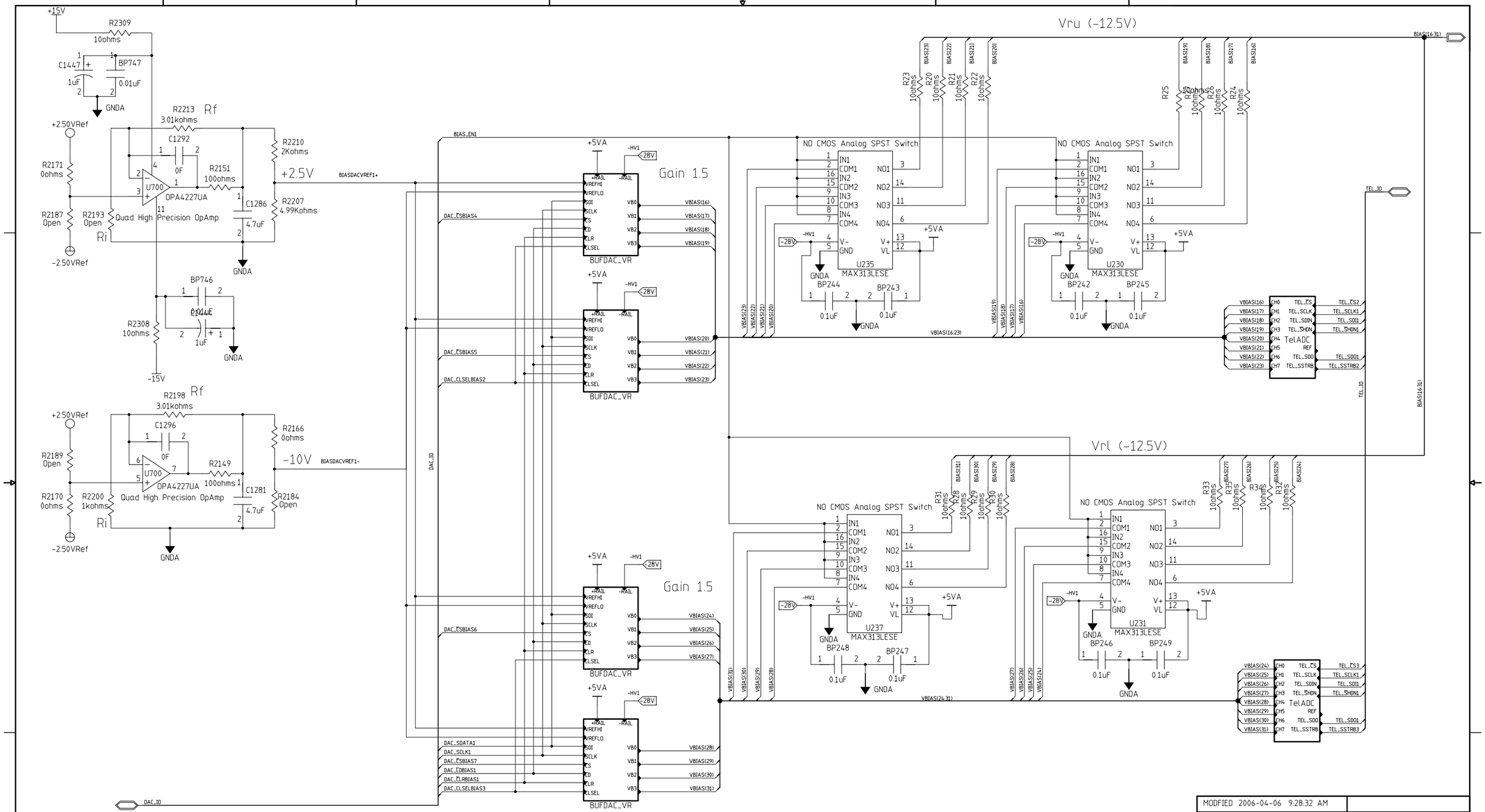


MODFIED 2006-04-06 9:28:32 AM

| | | | |
|---|---|---|---|
| EED Department | ORIGINATOR | Mark Kozlovsky | DATE 2005/11/03 |
| Page 12 | DRAWN | David Huffman | DATE Nov. 3, 2005 |
| | CHECKED | checked | DATE date |
| | APPROVED | approved | DATE date |

Fermi National Accelerator Laboratory
United States Department of Energy

D:\des_camera\ccdacq_sch_monsoon\ccdacq_schematic.prj

# Bias Output w/Enable 17-32

| SIZE | DRAWING NUMBER | | REV |
|---|---|---|---|
| D | drawing number | Schematic Page 01 of 01 | C |

H=BND. V=4LA