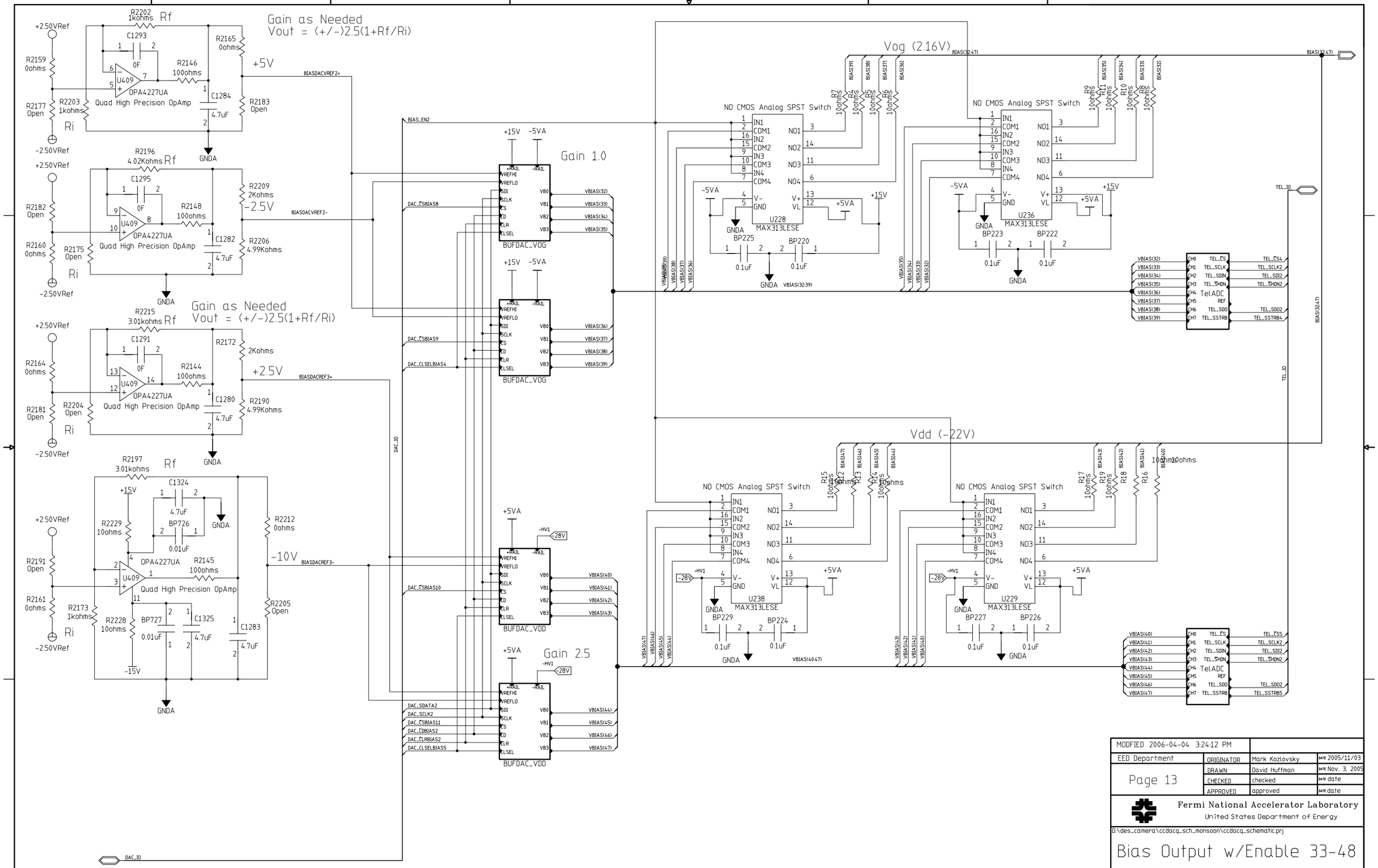
Gain as Needed
Vout = (+/-)2.5(1+Rf/Ri)
Gain as Needed
Vout = (+/-)2.5(1+Rf/Ri)
Gain 1.0
Gain 2.5
Vog (2.16V)
Vdd (-22V)
NO CMOS Analog SPST Switch
MAX313LESE
OPA4227UA
Quad High Precision OpAmp
BUFDAC_VOG
BUFDAC_VDD
TelADC
+2.50VRef
-2.50VRef
+5V
+2.5V
-2.5V
-10V
GNDA
BIASDACVREF2+
BIASDACVREF2-
BIASDACREF3+
BIASDACREF3-
BIAS_EN2
DAC_IO
TEL_IO
BIAS(32:47)
MODFIED 2006-04-04 3:24:12 PM
EED Department
Page 13
ORIGINATOR Mark Kozlovsky DATE 2005/11/03
DRAWN David Huffman DATE Nov. 3, 2005
CHECKED checked DATE date
APPROVED approved DATE date
Fermi National Accelerator Laboratory
United States Department of Energy
D:\des_camera\ccdacq_sch_monsoon\ccdacq_schematic.prj
Bias Output w/Enable 33-48
SIZE D
DRAWING NUMBER Schematic Page 01 of 01
drawing number
REV C