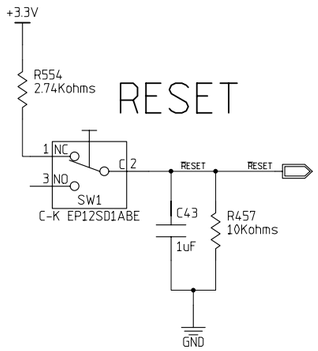

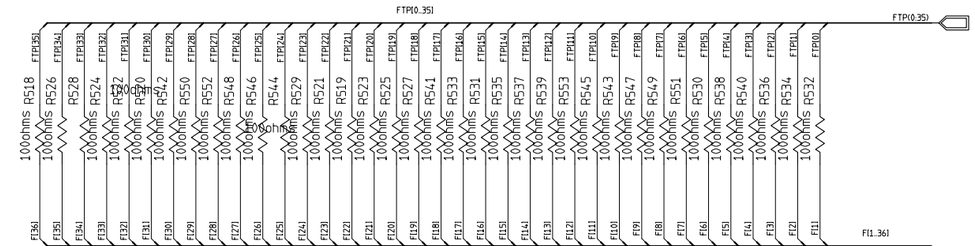

Analog Test Points

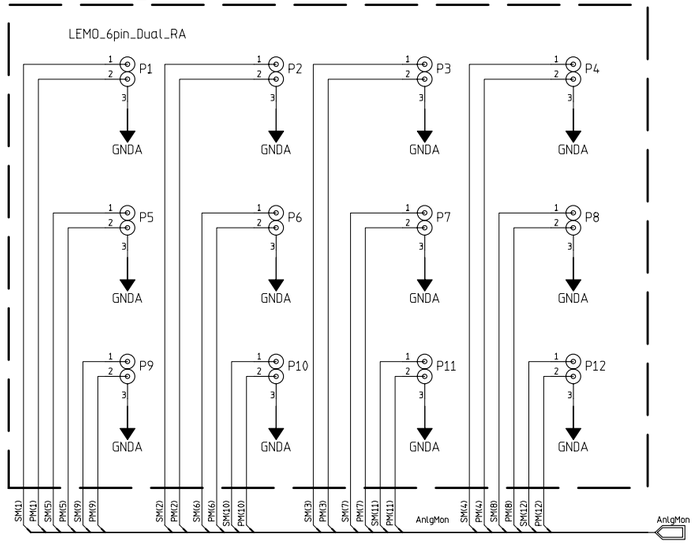

JTAG

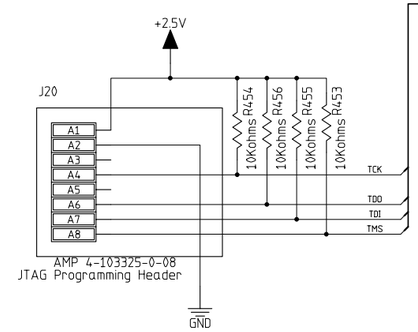

STATUS

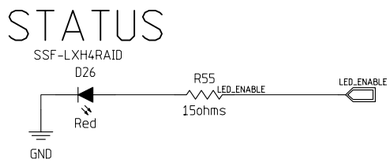

Digital Test Points

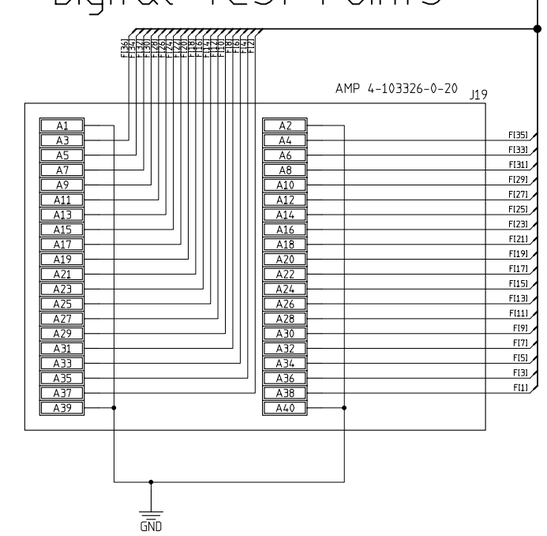

MODFIED 2006-04-04 4:48:56 PM			
EED Department	ORIGINATOR	Mark Kozlovsky	DATE 2005/11/03
Page 14	DRAWN	David Huffman	DATE Nov. 3, 2005
	CHECKED	checked	DATE date
	APPROVED	approved	DATE date

Fermi National Accelerator Laboratory
United States Department of Energy

D:\des_camera\ccdacq_sch_monsoon\ccdacq_schematic.prj

J6 Test Points/ Analog Mon
J7 JTAG

SIZE	DRAWING NUMBER	REV
D	drawing number (Schematic Page 01 of 01)	C

H=BND; V=4LA