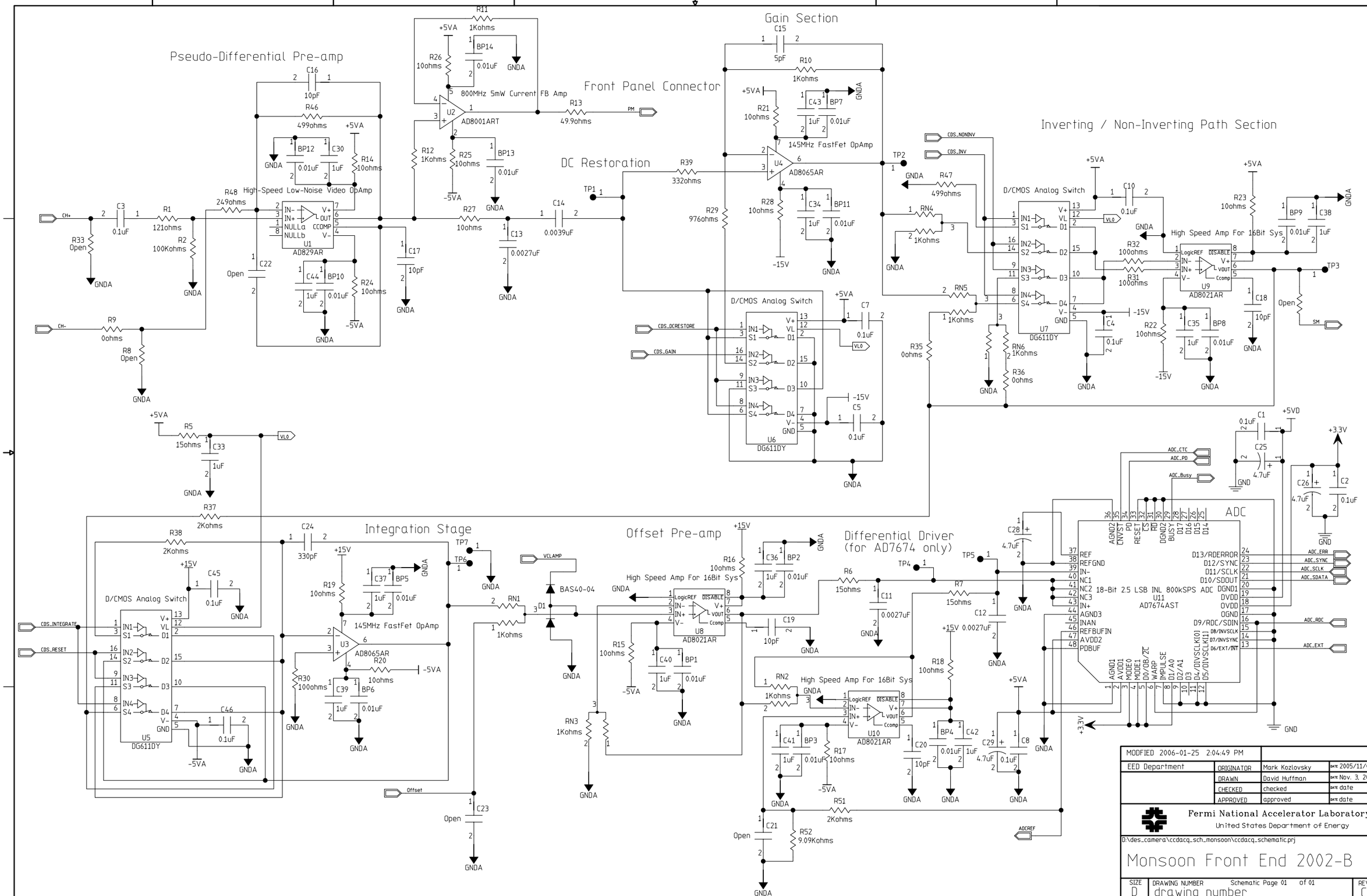
Pseudo-Differential Pre-amp
High-Speed Low-Noise Video OpAmp
AD829AR
800MHz 5mW Current FB Amp
AD8001ART
Front Panel Connector
DC Restoration
Gain Section
145MHz FastFet OpAmp
AD8065AR
D/CMOS Analog Switch
DG611DY
Inverting / Non-Inverting Path Section
High Speed Amp For 16Bit Sys
AD8021AR
Integration Stage
Offset Pre-amp
Differential Driver
(for AD7674 only)
ADC
AD7674AST
18-Bit 2.5 LSB INL 800kSPS ADC
MODIFIED 2006-01-25 2:04:49 PM
EED Department
ORIGINATOR Mark Kozlovsky DATE 2005/11/03
DRAWN David Huffman DATE Nov. 3, 2005
CHECKED checked DATE date
APPROVED approved DATE date
Fermi National Accelerator Laboratory
United States Department of Energy
D:\des_camera\ccdacq_sch_monsoon\ccdacq_schematic.prj
Monsoon Front End 2002-B
SIZE D
DRAWING NUMBER drawing number
Schematic Page 01 of 01
REV C