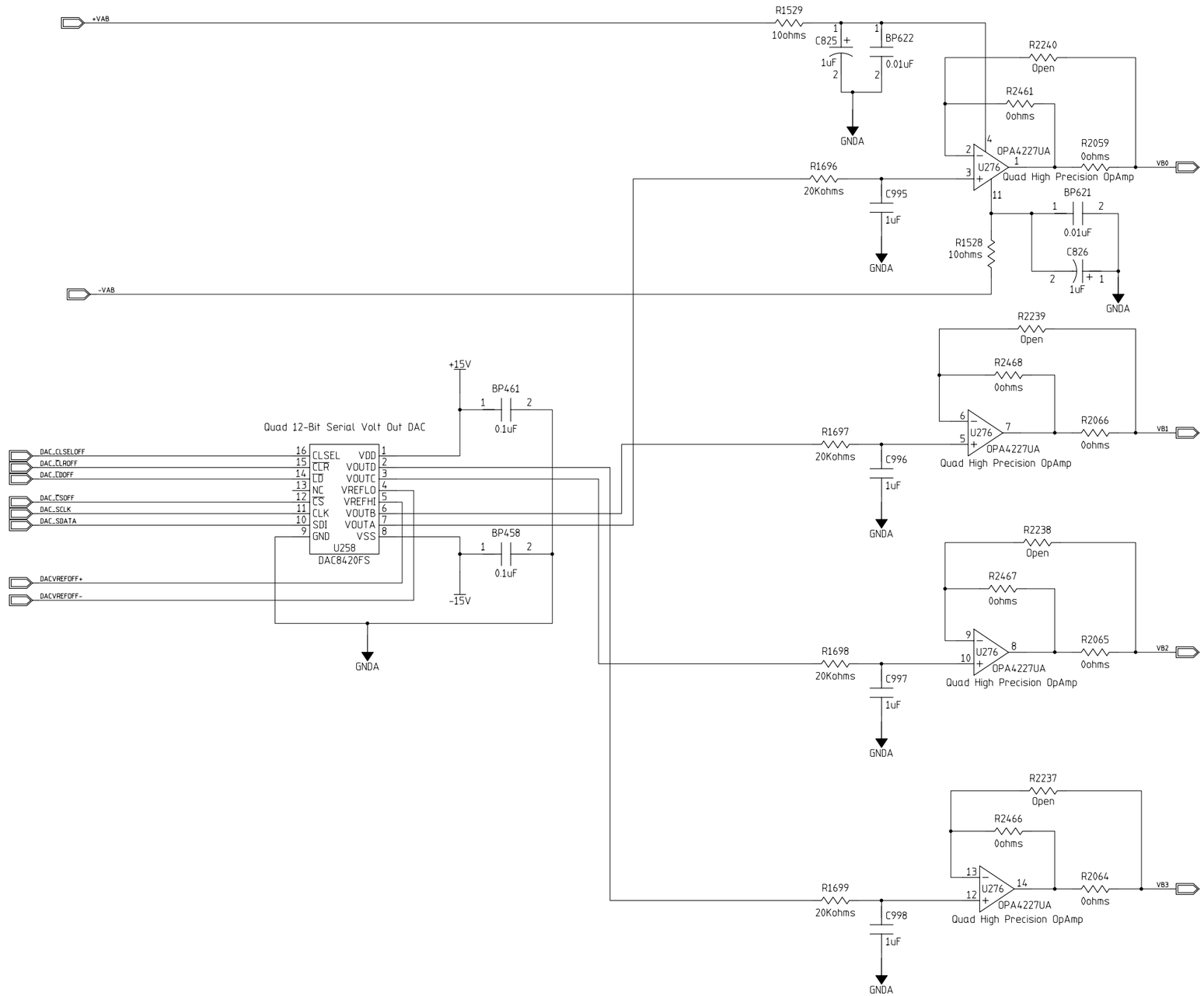

OFFSET DAC CHANNELS 4-7

MODFIED 2006-02-23 11:29:20 AM			
EED Department	ORIGINATOR	Mark Kozlovsky	DATE 2005/11/03
Page 16	DRAWN	David Huffman	DATE Nov. 3, 2005
	CHECKED	checked	DATE date
	APPROVED	approved	DATE date

Fermi National Accelerator Laboratory
United States Department of Energy

D:\des_camera\ccdacq_sch_monsoon\ccdacq_schematic.prj

OFFSET DAC

SIZE	DRAWING NUMBER		REV
D	drawing number	Schematic Page 01 of 01	C

H=BND; V=4LA