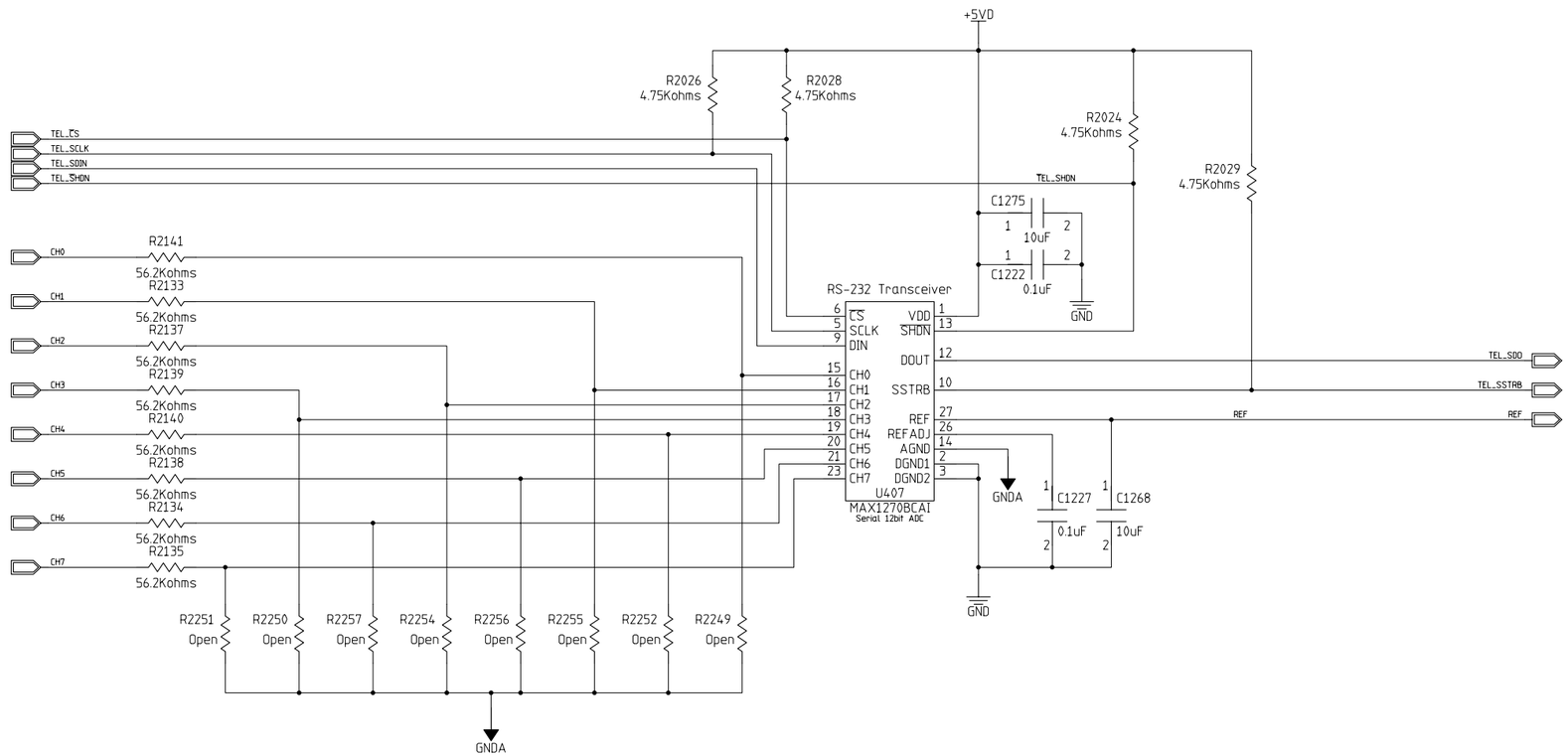

TELEMETRY CHANNELS BIAS 0-7

MODFIED 2006-02-08 10:53:16 AM			
EED Department	ORIGINATOR	Mark Kozlovsky	DATE 2005/11/03
Page 7	DRAWN	David Huffman	DATE Nov. 3, 2005
	CHECKED	checked	DATE date
	APPROVED	approved	DATE date

Fermi National Accelerator Laboratory
United States Department of Energy

D:\des_camera\ccdacq_sch_monsoon\ccdacq_schematic.prj

8-Channel Telemetry ADC

SIZE	DRAWING NUMBER	REV
D	Schematic Page 01 of 01 drawing number	C

H=8ND, V=4LA