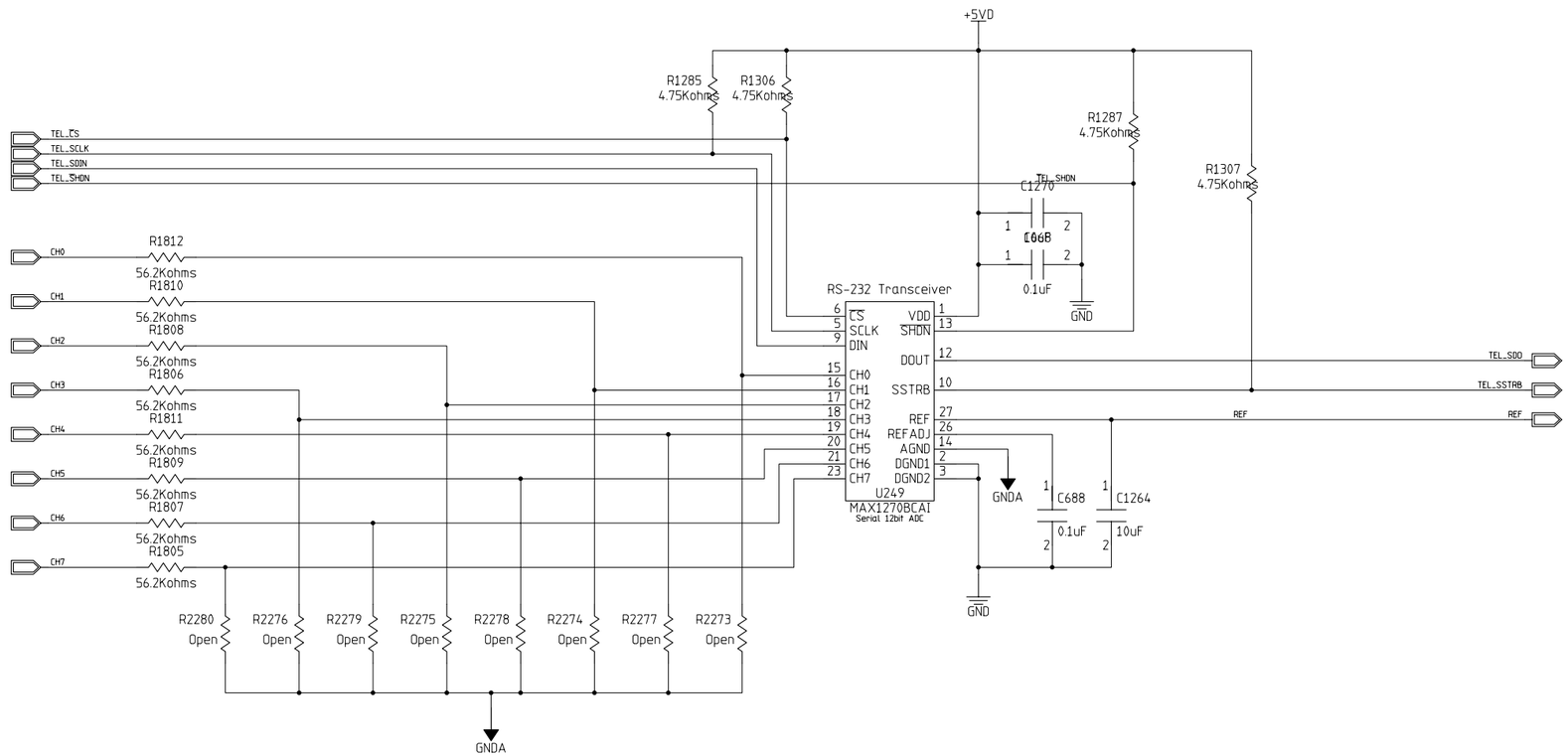


# TELEMETRY CHANNELS BIAS 40-47

| | | | |
|---|---|---|---|
| MODFIED 2006-02-08 10:53:16 AM | | | |
| EED Department | ORIGINATOR | Mark Kozlovsky | DATE 2005/11/03 |
| Page 7 | DRAWN | David Huffman | DATE Nov. 3, 2005 |
| | CHECKED | checked | DATE date |
| | APPROVED | approved | DATE date |

Fermi National Accelerator Laboratory
United States Department of Energy

D:\des_camera\ccdacq_sch_monsoon\ccdacq_schematic.prj

8-Channel Telemetry ADC

| SIZE | DRAWING NUMBER | REV |
|---|---|---|
| D | Schematic Page 01 of 01<br>drawing number | C |

H=8ND, V=4LA