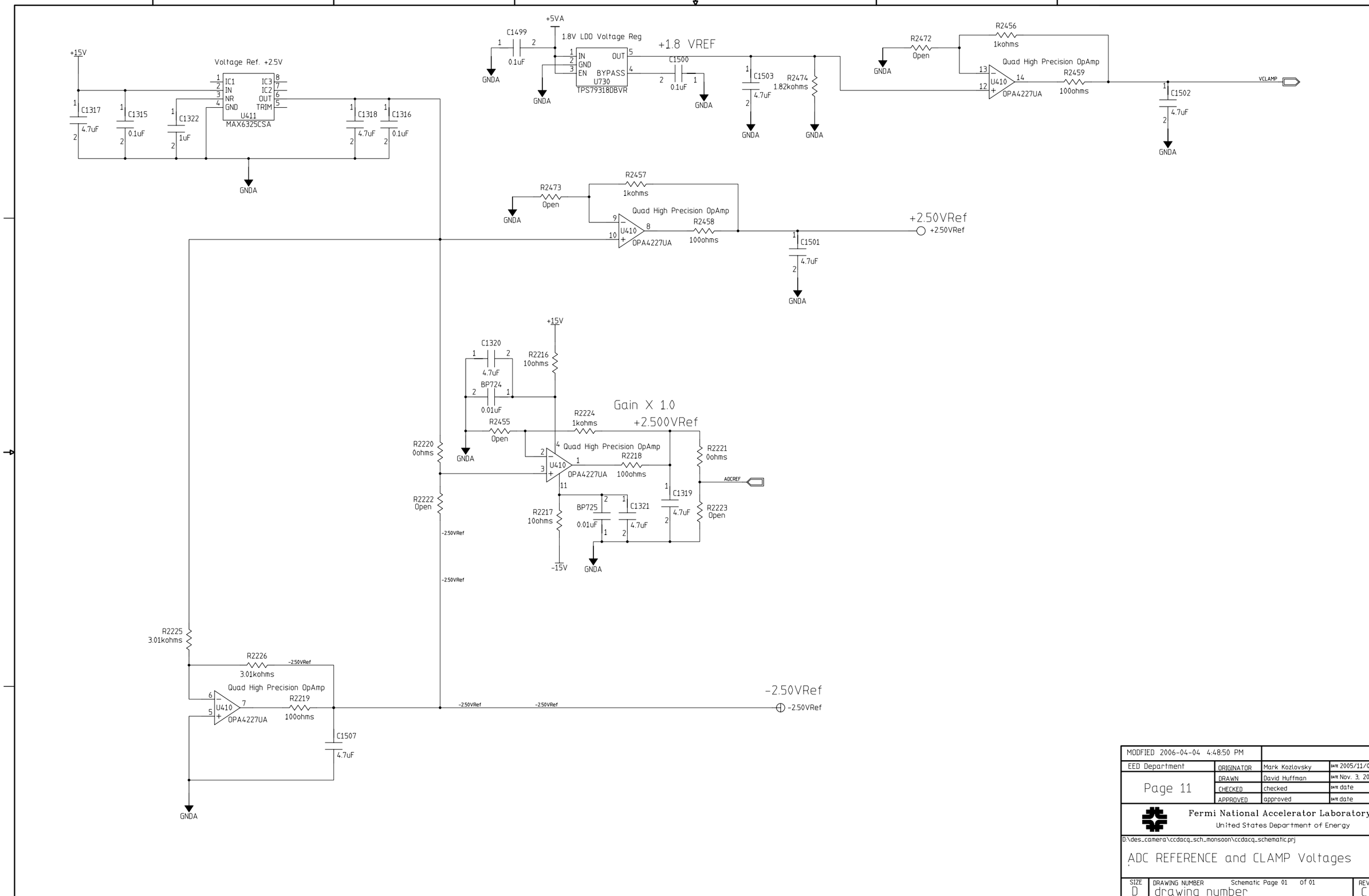

MODFIED 2006-04-04 4:48:50 PM			
EED Department	ORIGINATOR	Mark Kozlovsky	DATE 2005/11/03
Page 11	DRAWN	David Huffman	DATE Nov. 3, 2005
	CHECKED	checked	DATE date
	APPROVED	approved	DATE date

Fermi National Accelerator Laboratory
United States Department of Energy

D:\des_camera\ccdacq_sch_monsoon\ccdacq_schematic.prj

ADC REFERENCE and CLAMP Voltages

SIZE	DRAWING NUMBER	REV
D	drawing number Schematic Page 01 of 01	C

H=BND, V=4LA