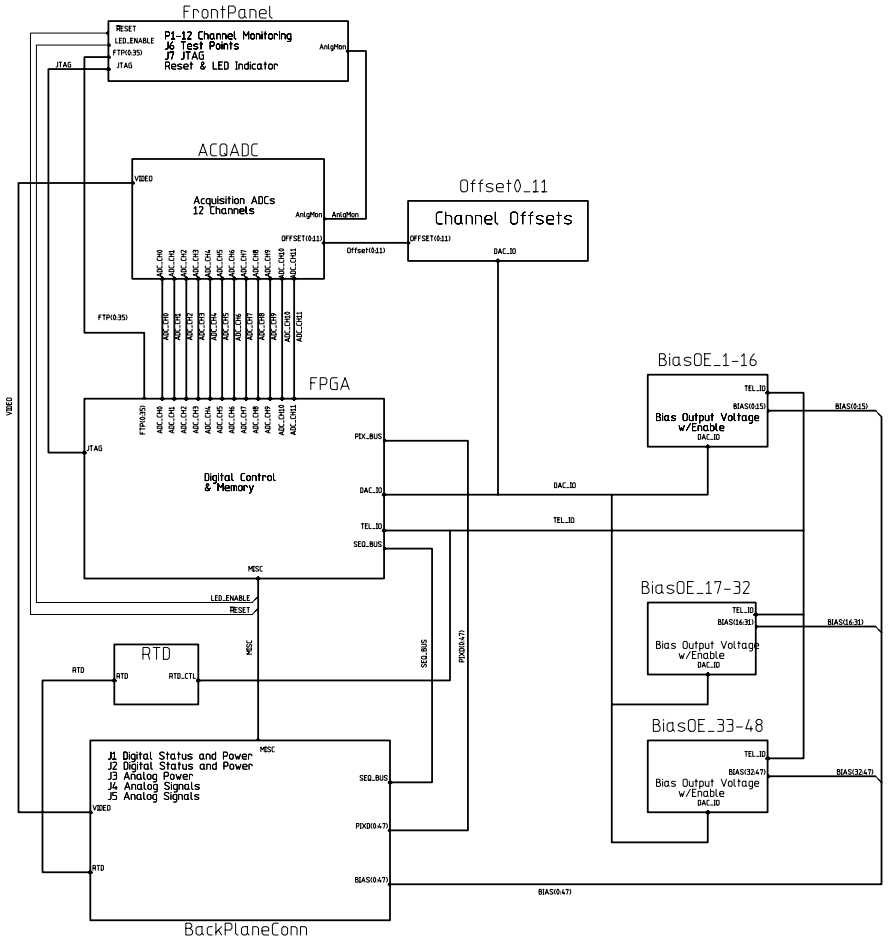

Page #	# of Pages		
1	main		
2		ACQADC	
3		X 12	Front_End_V4
4	4	FPGA	
5		X 13	VCCO_PWR
6		RTD	
7			TelADC
8	4	BackPlaneConn	
9		BiasOE_1-16	
7			TelADC
10			BUFDAC
17			SLEW
11		VRefBuf	
12		BiasOE_17-32	
7		X 2	TelADC
10		X 4	BUFDAC
13		BiasOE_33-48	
7		X 2	TelADC
10		X 4	BUFDAC
14		FrontPanel	
15		Offset0_11	
16		X 3	OFFSET

MODIFIED 2006-03-31 1:20:38 PM			
EED Department	ORIGINATOR	Mark Kozlovsky	DATE 2005/11/03
Page 1	DRAWN	David Huffman	DATE Nov. 3, 2005
	CHECKED	checked	DATE date
	APPROVED	approved	DATE date

Fermi National Accelerator Laboratory
United States Department of Energy

D:\des_camera\ccdacq_sch_monsoon\ccdacq_schematic.prj

ACQUISITION BOARD TOP LEVEL

SIZE	DRAWING NUMBER		REV
D	drawing number	Schematic Page 01 of 01	C

H=BND: V=4LA