```
 DESCRIPTION  : DECODES THE CONFIGURATION DEVICE ADDRESS FROM THE SERIAL
 CONFIGURATION FRONT END AND RECEIVES SERIAL CONFIGURATION DATA TO SUPPLY
 VARIOUS CONTROL SIGNALS TO THE BOARD.
 THIS MODULE PROVIDES THE STATIC SIGNALS FOR TEL ADC POWER DOWN PLUS LED
 AND BIAS ENABLES.
-----------------------------------------------------------------------
 IMPLEMENTATION NOTES :
 AUX DEVICES USE:-
 SERIAL FUNCT CODE "100".
 SERIAL DEVADDR RANGE NOT USED.
 SERIAL MSG LENGTH IS 9.

  BIT  |       Function
---------------------------------
      8  |  DAC_CLSEL 2
      7  |  DAC_CLSEL 1
      6  |  DAC_CLSEL 0
      5  |  DAC_CLR 1
      4  |  DAC_CLR 0
      3  |  LED ON
      2  |  TEL_SHDN
      1  |  BIAS_EN
      0  |  CDS_DRIVER_EN

   MSBIT FIRST.
```

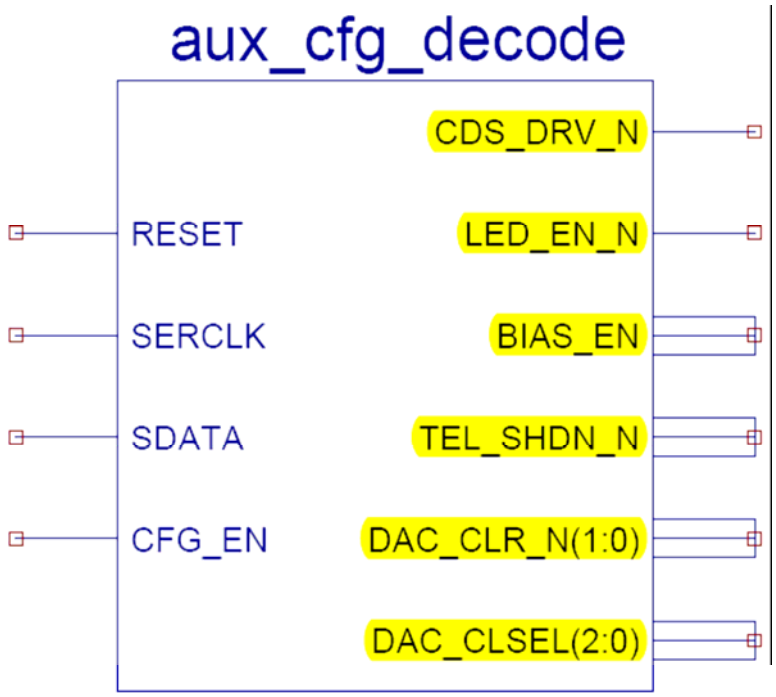


```
BIAS_EN    : out std_logic;
CDS_DRV_N  : out std_logic
CFG_EN     : in  std_logic;
DAC_CLR_N  : out std_logic_vector(1 downto 0);
DAC_CLSEL  : out std_logic_vector(2 downto 0);
LED_EN_N   : out std_logic;
RESET      : in  std_logic;
SDATA      : in  std_logic;
SERCLK     : in  std_logic;
TEL_SHDN_N : out std_logic;
```

CFG_AUX: process (RESET, SERCLK)

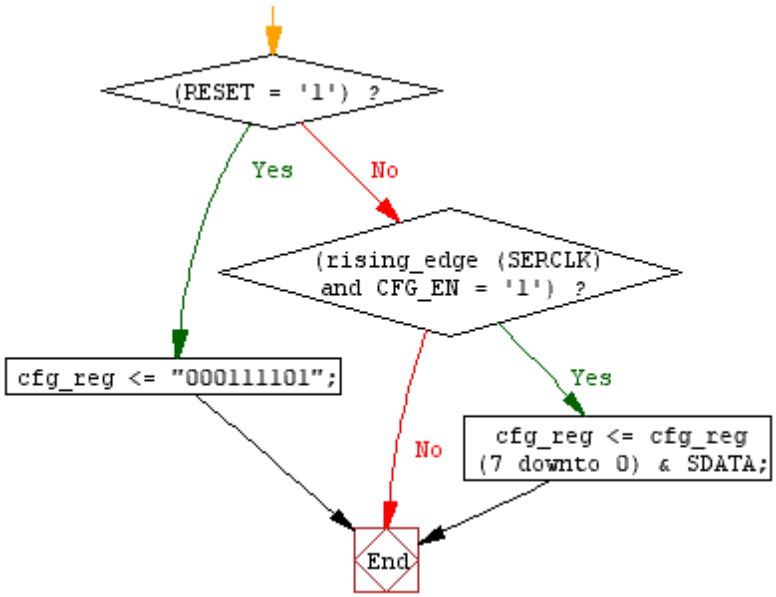

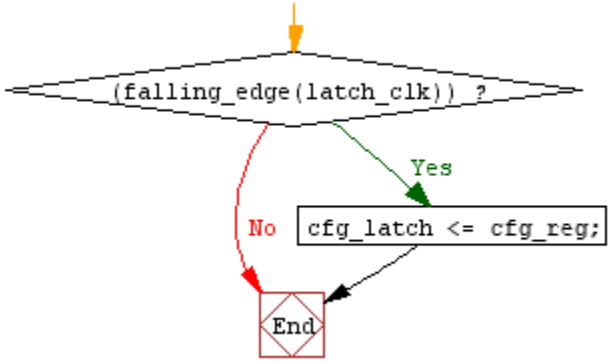
CFG_OUT: process (latch_clk)