REV.	DESCRIPTION	DRAWN	DATE
		APPD.	DATE
B	Additional notes		
C	Trimmed Height		
D	RE-DESIGN USING BRASS ANGLE		

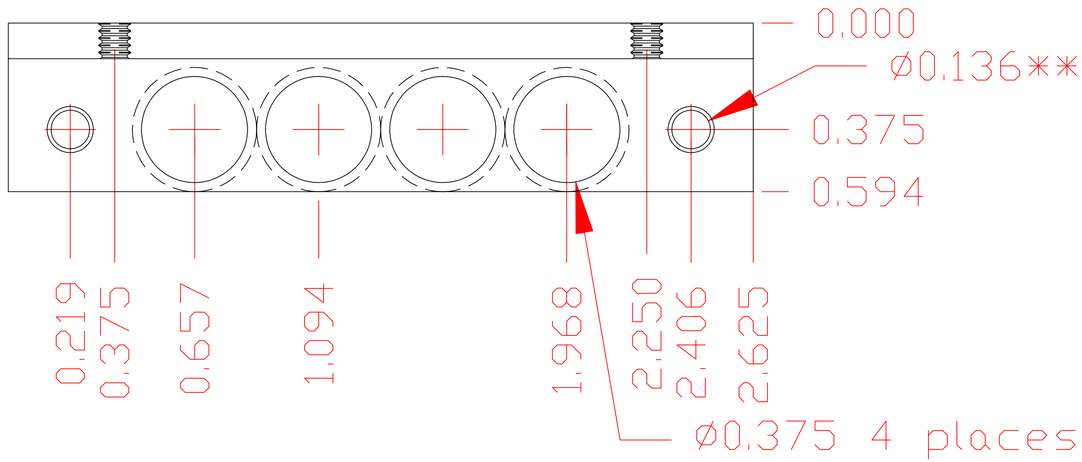

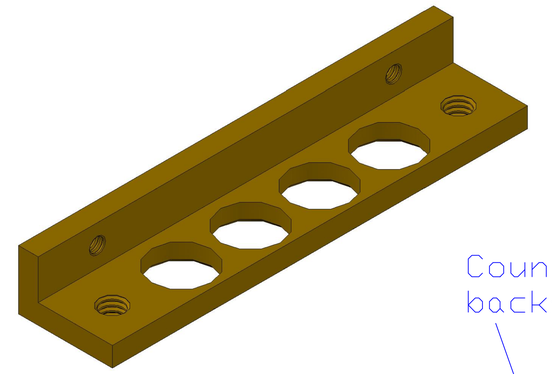

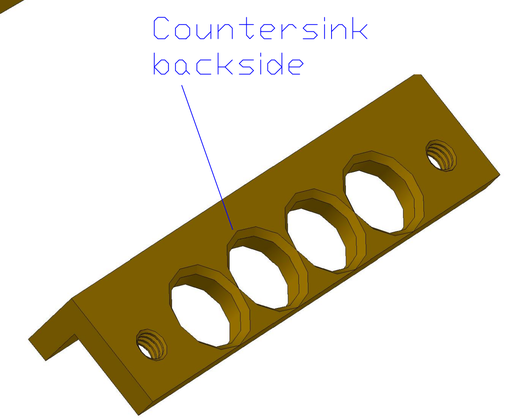

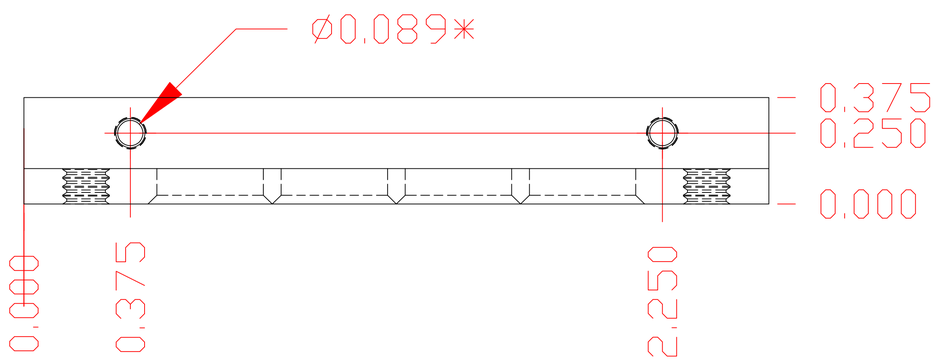

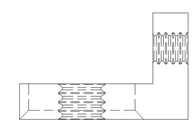

NOTE:
* DRILL AND TAP 4-40 THRU 2 HOLES

** DRILL AND TAP 8-32 THRU 2 HOLES

Countersink 0.375" holes 1/32"deep
from back side.

Finish with Bright Tin Plating

ITEM	PART NO.	DESCRIPTION OR SIZE	QTY.
		PARTS LIST	

UNLESS OTHERWISE SPEC.			ORIGINATOR	D. L. HUFFMAN
FRACTIONS	DECIMALS	ANGLES	DRAWN	
1/64	0.002	0.01	CHECKED	
			APPROVED	
			USED ON	
			MATERIAL– 1/8×3/2×3/2 BRASS ANGLE (Alloy 360)	

FERMI NATIONAL ACCELERATOR LABORATORY
UNITED STATES DEPARTMENT OF ENERGY

DECam Frontend Electronics
DC FILTER BOX
BARRIER STRIP BRACKET

SCALE	FILMED	DRAWING NUMBER	REV.
2:1		0000-MD-173692	D