DWG. NO.	SH.	REV

REVISIONS 09/28/99 08:53:26

REV	DESCRIPTION	DATE	APPROVED

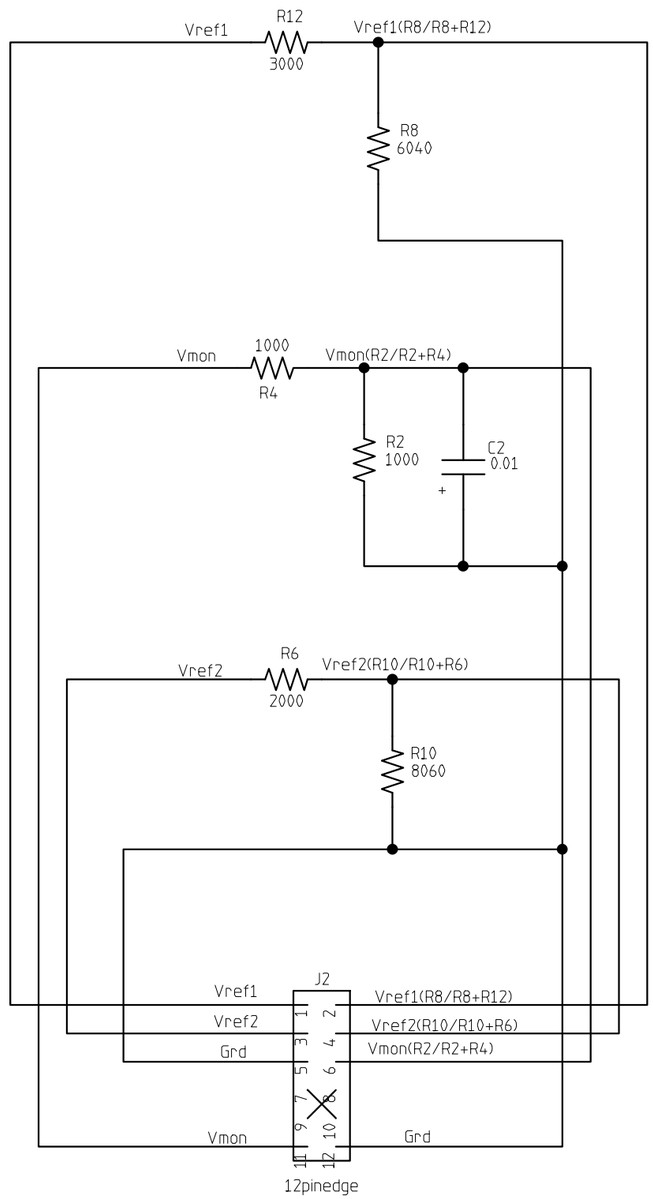

Personality PCB

Personality mod. Values

CONTRACT NO.		
APPROVALS	DATE	Personality Module Negative Voltage
DRAWN		
CHECKED	99-09-28	SIZE B · FSCM NO. · DWG. NO. 3823.121.330267 · REV A
ISSUED		
		SCALE · SHEET 02

H=2LA; V=2LA