DWG. NO.	SH.	REV

REVISIONS 09/28/99 08:50:54

REV	DESCRIPTION	DATE	APPROVED

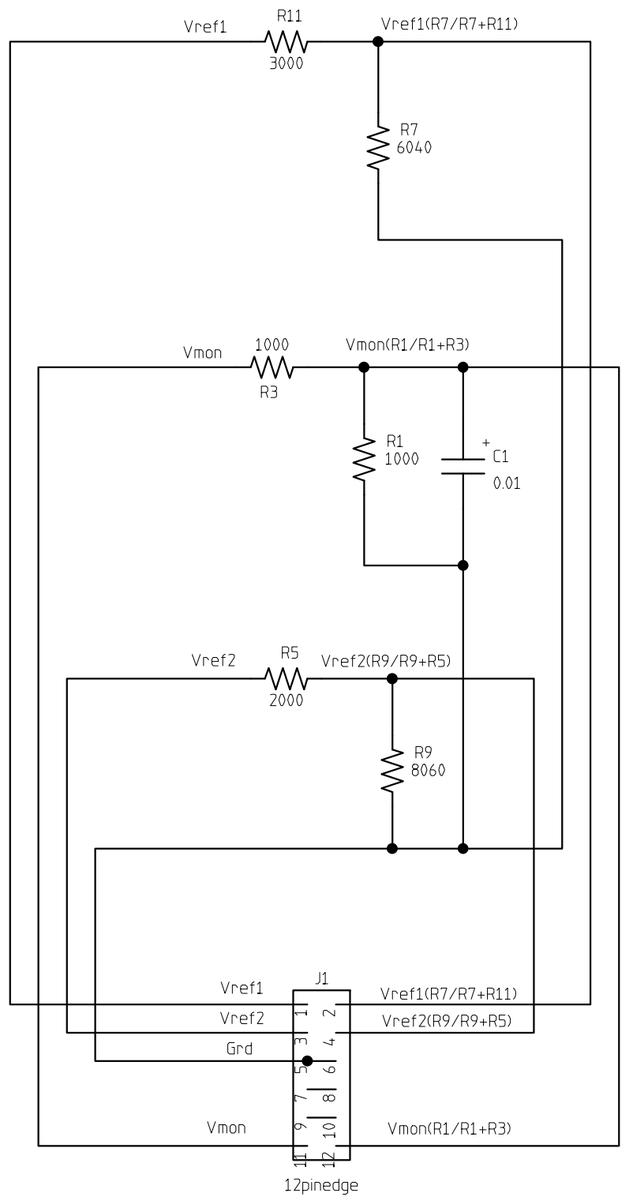

Personality PCB

Personality Mod. Values

How To Pick Resistors

CONTRACT NO.					
APPROVALS	DATE	Personality Module Positive Voltage			
DRAWN					
CHECKED	99-09-28	SIZE B	FSCM NO.	DWG. NO. 3823.121.EB-330276	REV A
ISSUED					
		SCALE		SHEET 01	

H=2LA; V=2LA