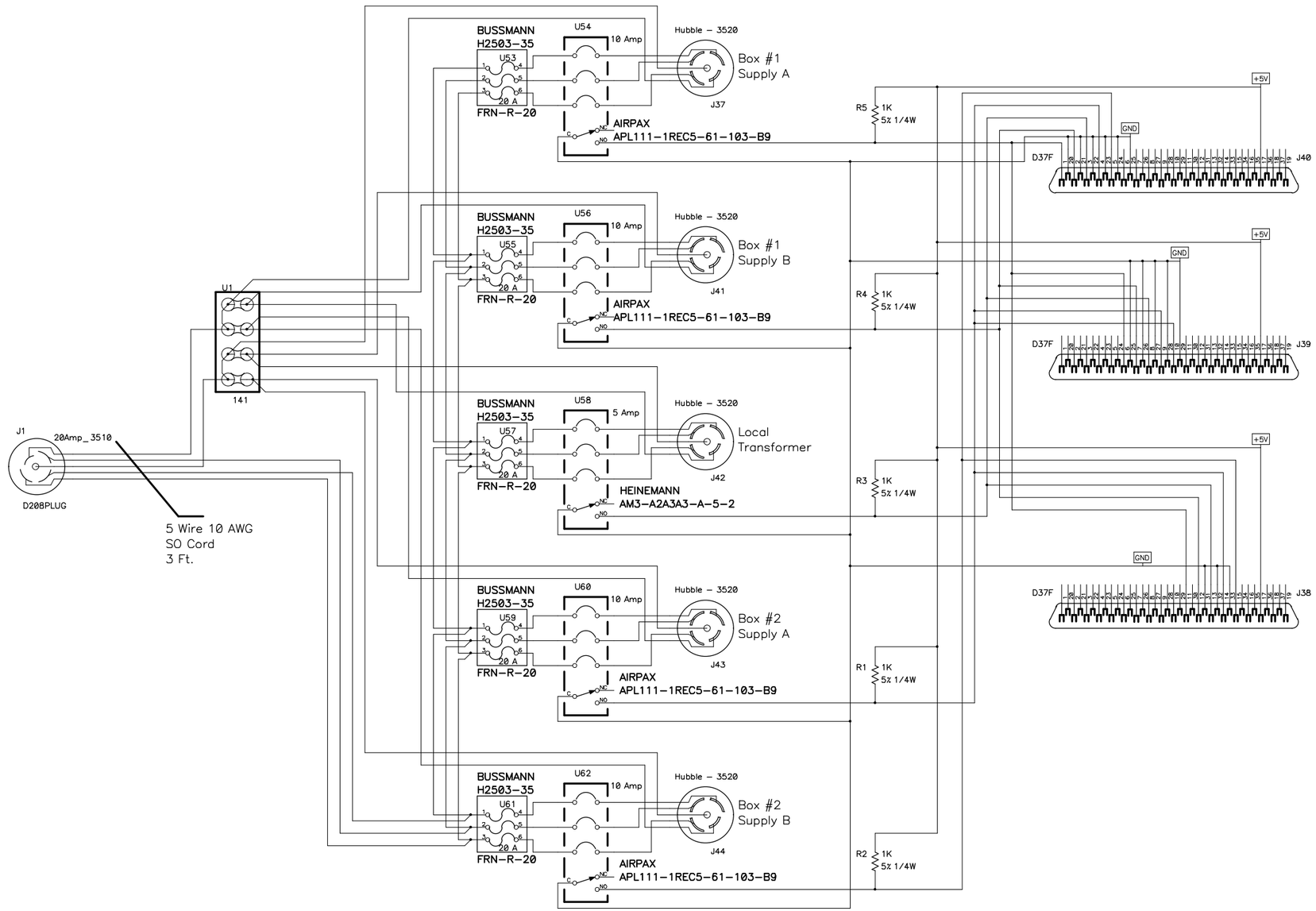

NOTE 1: All Wiring is 14 AWG unless
Specified Differently.

Title 09:16:03 Fri Mar 24 2000 Preamp PS AC Distribution		
Size D	Number 3740.412-ED-286235	Rev D
Date March 1, 2000	David L. Huffman	
Filename ed286235.SCH	Sheet 1 of 1	