REV.	DESCRIPTION	DRAWN	DATE
		APPD.	DATE

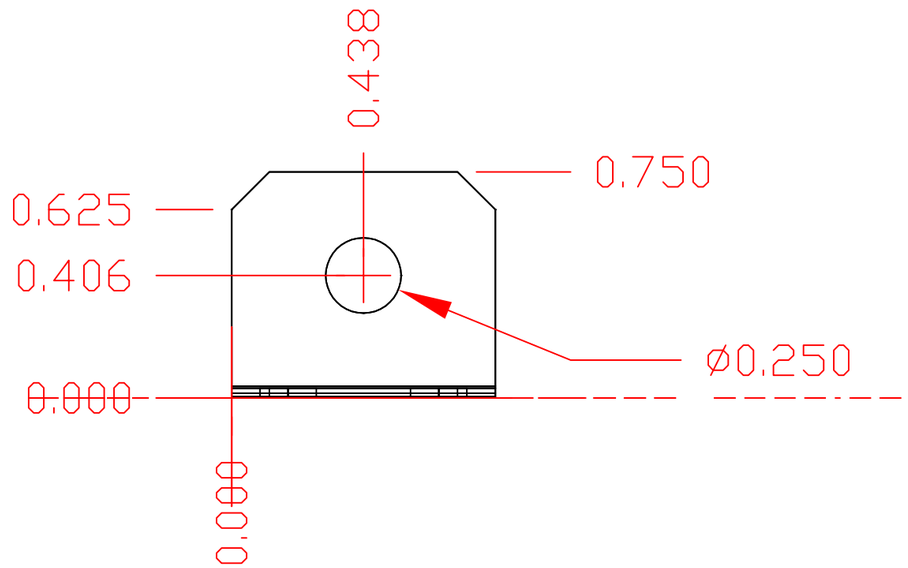

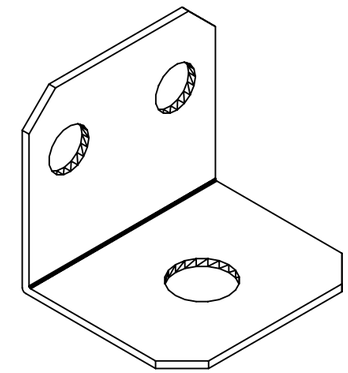

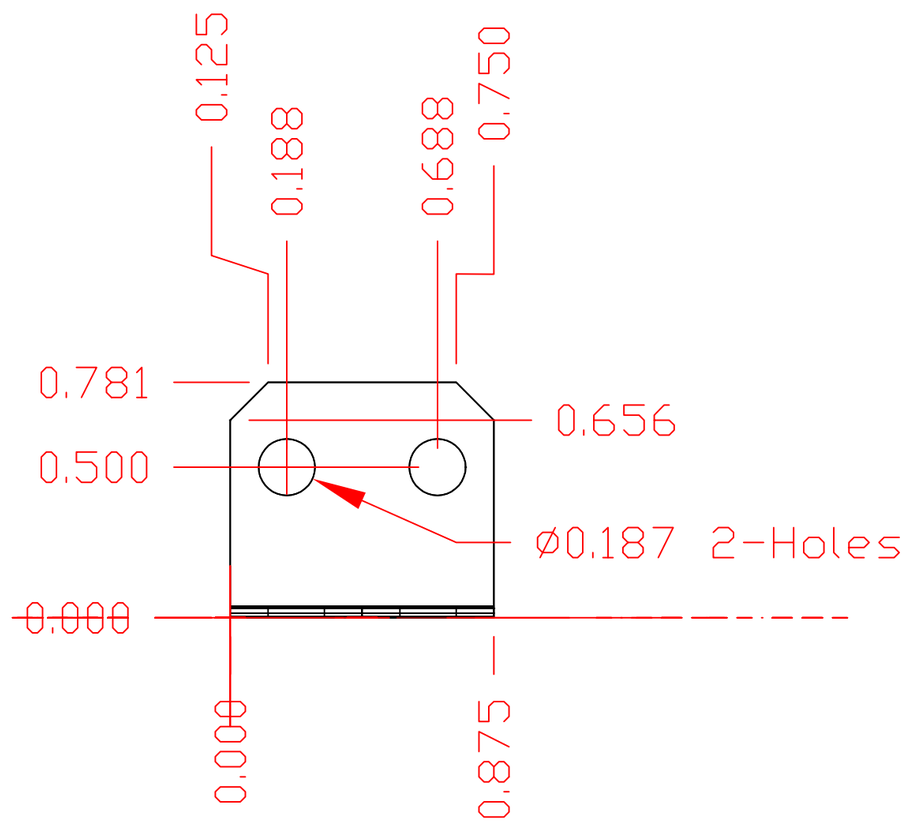

NOTE: FINISH WITH BRIGHT TIN PLATING 0.0005" MIN.

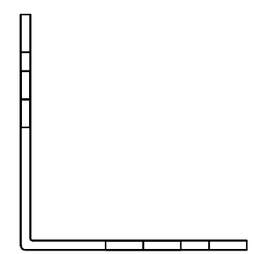

ITEM	PART NO.	DESCRIPTION OR SIZE	QTY.
PARTS LIST			

UNLESS OTHERWISE SPEC.			ORIGINATOR	D. L. HUFFMAN	8/1/89
FRACTIONS	DECIMALS	ANGLES	DRAWN		
			CHECKED		
			APPROVED		
			USED ON		
			MATERIAL- OFHC COPPER 1/32"		

FERMI NATIONAL ACCELERATOR LABORATORY
UNITED STATES DEPARTMENT OF ENERGY

DO SYSTEM LOW VOLTAGE P.S.
DIODE BUS SINGLE FLAG

SCALE	FILMED	DRAWING NUMBER	REV.
2:1		3740.412-MB-286018	