| REV. | DESCRIPTION | DRAWN | DATE |
|---|---|---|---|
| | | APPD. | DATE |

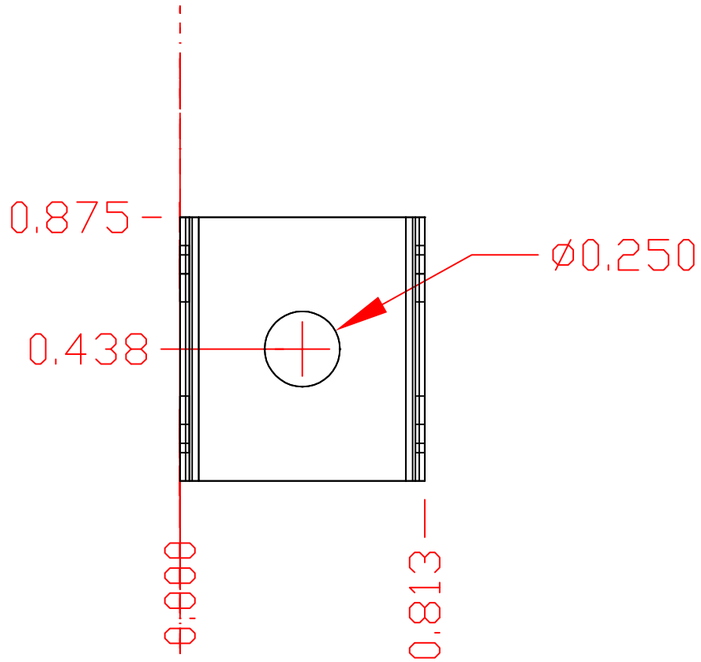


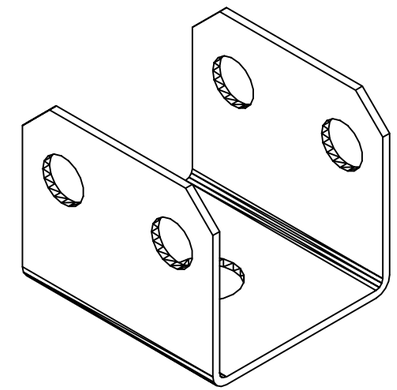

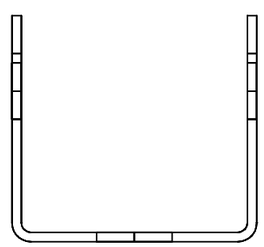

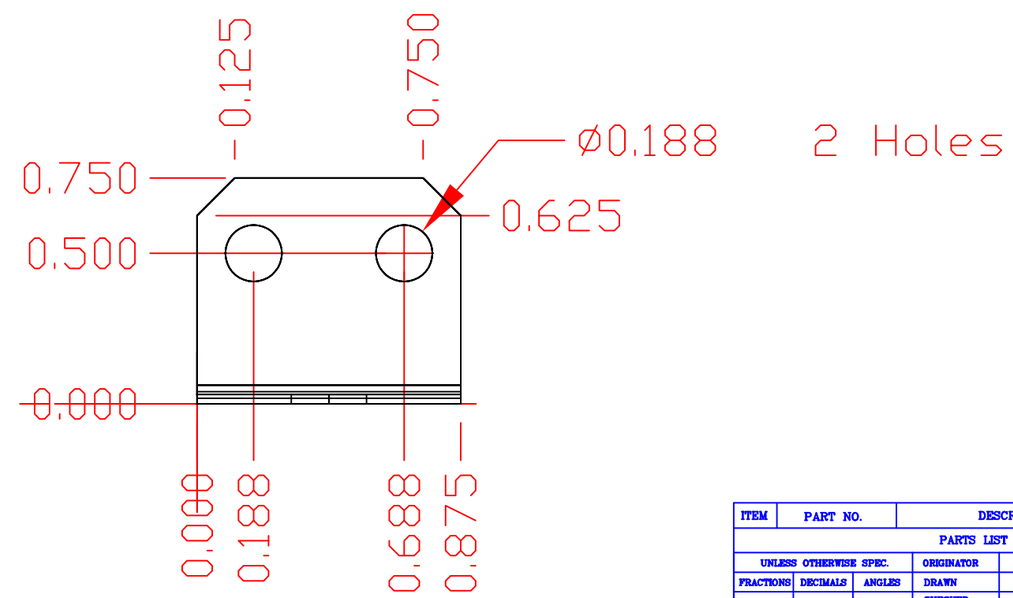


NOTE: FINISH WITH BRIGHT TIN

PLATING 0.0005" MIN.

| ITEM | PART NO. | DESCRIPTION OR SIZE | QTY. |
|---|---|---|---|
| PARTS LIST | | | |

| UNLESS OTHERWISE SPEC. | | | ORIGINATOR | D. L. HUFFMAN | 8/1/89 |
|---|---|---|---|---|---|
| FRACTIONS | DECIMALS | ANGLES | DRAWN | | |
| | | | CHECKED | | |
| | | | APPROVED | | |
| | | | USED ON | | |
| | | | MATERIAL- OFHC COPPER 1/32" | | |

FERMI NATIONAL ACCELERATOR LABORATORY
UNITED STATES DEPARTMENT OF ENERGY

DO SYSTEM LOW VOLTAGE P.S.
DIODE BUS DOUBLE FLAG

| SCALE | FILMED | DRAWING NUMBER | REV. |
|---|---|---|---|
| 2:1 | | 3740.412-MB-286019 | |