REV.	DESCRIPTION	DRAWN	DATE
		APPD.	DATE

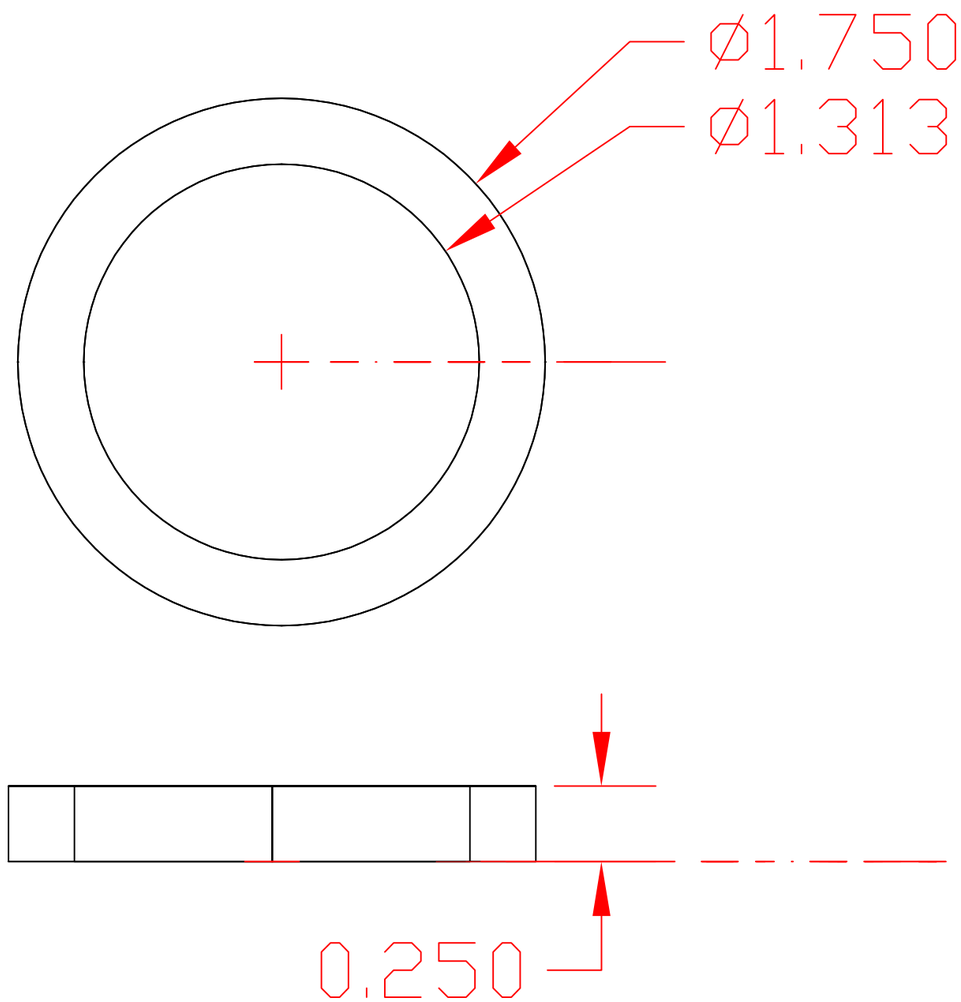

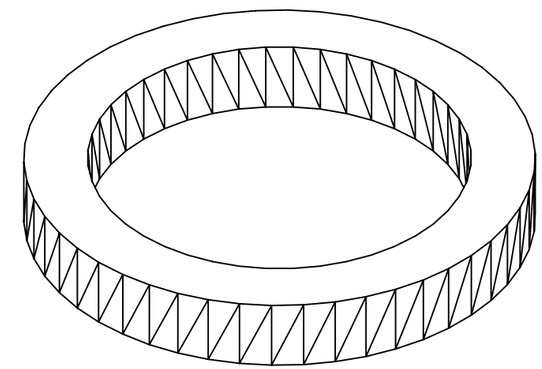

NOTE: FINISH WITH ELECTRICALLY CONDUCTIVE PROTECTIVE COATING IRIDITE #14-2 AL-COAT, ALODINE No. 1200S, OR EQUAL. FINISH COLOR MUST BE UNIFORM.

ITEM	PART NO.	DESCRIPTION OR SIZE	QTY.
PARTS LIST			

UNLESS OTHERWISE SPEC.			ORIGINATOR	D. L. HUFFMAN	8/2/89
FRACTIONS	DECIMALS	ANGLES	DRAWN		
			CHECKED		
			APPROVED		
			USED ON		
			MATERIAL-	6061-T6 ALUM. 1/4"	

FERMI NATIONAL ACCELERATOR LABORATORY
UNITED STATES DEPARTMENT OF ENERGY

D0 SYSTEM LOW VOLTAGE P.S.
AC INPUT WASHER

SCALE	FILMED	DRAWING NUMBER	REV.
2:1		3740.412-MB-286025	