REV.	DESCRIPTION	DRAWN	DATE
		APPD.	DATE

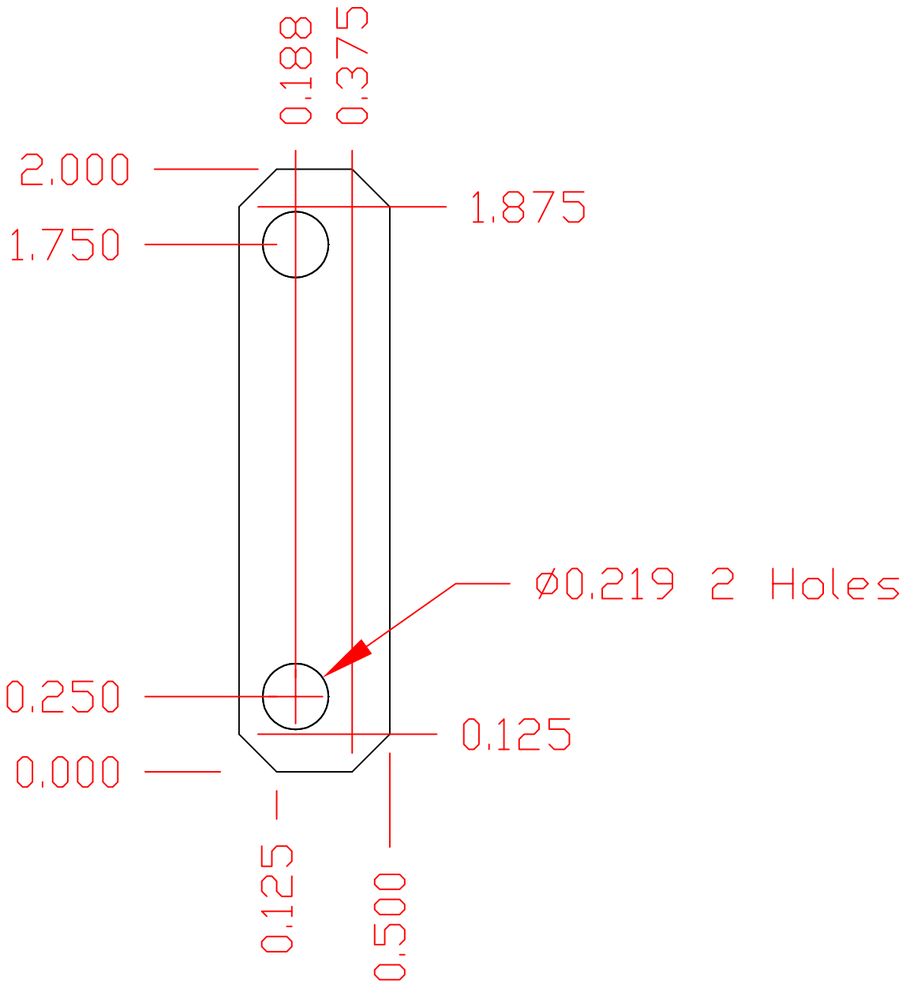

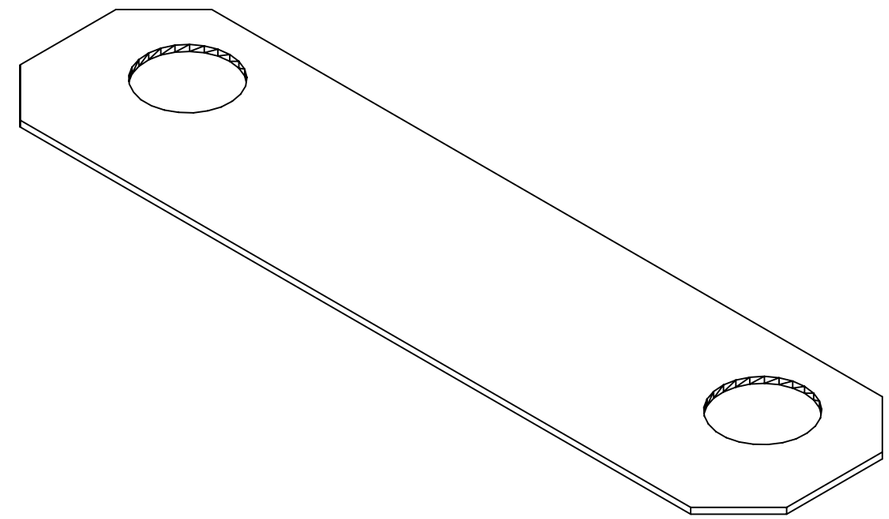

NOTE: FINISH WITH BRIGHT TIN PLATING 0.0005" MIN.

ITEM	PART NO.	DESCRIPTION OR SIZE	QTY.
PARTS LIST			

UNLESS OTHERWISE SPEC.			ORIGINATOR	D. L. HUFFMAN	8/2/89
FRACTIONS	DECIMALS	ANGLES	DRAWN		
			CHECKED		
			APPROVED		
			USED ON		
			MATERIAL–	OFHC COPPER 1/32"	

FERMI NATIONAL ACCELERATOR LABORATORY
UNITED STATES DEPARTMENT OF ENERGY

DO SYSTEMS LOW VOLTAGE P.S.
CAPACITOR BUS 1

SCALE	FILMED	DRAWING NUMBER	REV.
		3740.412-MB-286027	