REV.	DESCRIPTION	DRAWN / APPD.	DATE / DATE
A	MOVED SECOND HOLE FROM LEFT TO RIGHT	DLH	10/13/89

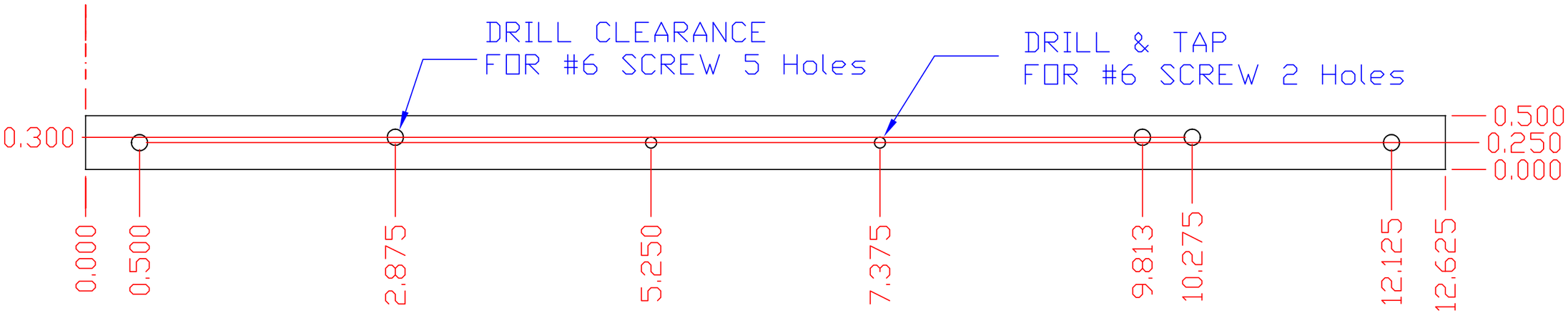

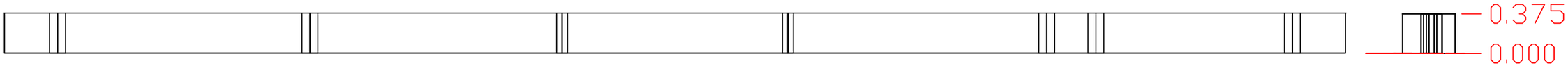

NOTE: FINISH WITH ELECTRICALLY CONDUCTIVE
PROTECTIVE COATING IRIDITE #14-2 AL-COAT,
ALODINE No. 1200S, OR EQUAL.
FINISH COLOR MUST BE UNIFORM.

ITEM	PART NO.	DESCRIPTION OR SIZE	QTY.
PARTS LIST			

UNLESS OTHERWISE SPEC.			ORIGINATOR	D. L. HUFFMAN	9/22/89
FRACTIONS	DECIMALS	ANGLES	DRAWN		
			CHECKED		
			APPROVED		
			USED ON		
			MATERIAL– 6061-T6 ALUM. 1/2 X 3/8"		

FERMI NATIONAL ACCELERATOR LABORATORY
UNITED STATES DEPARTMENT OF ENERGY

D0 SYSTEM CALORIMETER

FAULT & LOGIC BOARD MOUNTING BRACKET

SCALE	FILMED	DRAWING NUMBER	REV.
		3740.412-MB-286038	